pullman

HOTELS AND RESORTS

LIGHTING SPECIFICATIONS
灯具规格说明书

ISSUED 发表时间: 2020.1.22

ASIG DESIGN

杰 璐 设 计 工 作 室

LIGHTING SPECIFICATIONS
灯具规格说明书

TABLE OF CONTENTS 篇目

Project 项目: 铂尔曼自助餐厅 PULLMAN RESTAURANT
Date 日期: 2020.1.22

INTRODUCTION: 简介

MANUFACTURER SHALL PREPARE SHOP DRAWINGS AND/OR PROTOTYPE SAMPLES FOR CHECKING AND APPROVAL BY ASIG PRIOR TO MANUFACTURE. ASIG RESERVES THE RIGHT TO REJECT ITEMS THAT DO NOT MEET THE SPECIFICATION REQUIREMENTS. ALL SPECIFICATIONS ARE THE PROPERTY OF ASIG, AND ALONG WITH CUSTOM DESIGNS AND PRINTS, CANNOT BE USED WITHOUT WRITTEN PERMISSION. THE SAME SHALL BE RETURNED AT THE COMPLETION OF THE WORK. DO NOT SCALE DRAWINGS. ALL MEASUREMENTS MUST BE CHECKED AT THE SITE BY THE CONTRACTOR OR FF&E MANUFACTURER. QUANTITIES LISTED ARE FOR REFERENCE ONLY AND ARE SUBJECT TO CHANGE. PURCHASING AGENT SHALL VERIFY ALL QUANTITIES AGAINST PLANS PRIOR TO ISSUANCE OF PURCHASE ORDERS. ANY DISCREPANCIES SHALL BE BROUGHT TO THE ATTENTION OF JL PRIOR TO PURCHASING. VENDORS TO DIRECT ALL QUERIES THROUGH CLLENT’ SPURCHASING AGENT. THE IMAGES CONTAINED HEREIN ARE NOT TO BE USED FOR THE ENGINEERING OR MANUFACTURING OF THE PRODUCT DEPICTED HEREON. MANUFACTURER TO BE RESPONSIBLE FOR THE ENGINEERING,FUNCTIONALITY AND DURABILITY OF THE FINAL PRODUCT. NEITHER THESE IMAGES NOR THE DESIGN INTENT REFLECTED THEREON SHALL BE USED IN ANY MANNER WHICH MAY RESULT IN AN INFRINGEMENT OF ANY COPYRIGHTS,TRADEMARKS, PATENTS OR OTHER INTELLECTUAL PROPERTY RIGHTS. MANUFACTURER SHALL BE SOLELY RESPONSIBLE FOR COMPLIANCE WITH ALL APPLICABLE U.S. AND OTHER LAWS REGARDING COPYRIGHTS, TRADEMARKS, PATENTS AND INTELLECTUAL PROPERTY RIGHTS, AND SHALL INDEMNIFY AND HOLD ASIG, AND ALL OF ITS RELATED ENTITIES, HARMLESS FROM ANY CLAIMS, DAMAGES OR EXPENSES RESULTING FROM ANY NEGLIGENT OR WILLFUL VIOLATION OF THE SAME.

制造商应当准备施工图和 / 或原型样品生产前检查和杰璐设计批准。杰璐设计有权否决项不符合规范要求。所有的规格是杰璐设计的财产 , 以及定制的设计和打印 , 不能没有书面许可使用。同样应当退还的完成工作。没有图纸。必须检查所有测量在现场由承包商或制造商。FF&E 列出数量仅供参考 , 如有更改 , 恕。采购员应核实数量与计划发行采购订单之前。任何差异应杰之前采购的注意。供应商直接所有查询通过 CLLENTS PURCHASING 代理。本文所包含的图像不用于工程或制造产品的描述在此。制造商负责工程、功能和最终产品的耐用性。这些图像和设计意图的反映上应以任何方式使用 , 可能会导致侵犯任何版权、商标、专利或其他知识产权。制造商应全权负责遵守所有适用的美国和其他法律有关版权、商标、专利和知识产权 , 并应赔偿并持有方 , 和所有相关的实体 , 无害的任何索赔、损失或费用所产生的任何疏忽或故意违反相同

ASIG DESIGN
杰 璐 设 计 工 作 室

LIGHTING SPECIFICATIONS
灯具规格说明书

GENERAL NOTES 说明

1. MANUFACTURER TO PROVIDE ASIG DESIGN SHOP DRAWINGS AND 12″X12″ FINISH SAMPLES FOR ALL EXPOSED FINISH MATERIALS FOR APPROVAL PRIOR TO PRODUCTION.
   制造商提供 ASIG 施工图和 12“X12”完成所有样品接触材料批准之前生产完成。

2. MANUFACTURER TO WORK IN CONJUNCTION WITH RS DESIGNER TO ENSURE PROPER PROPORTIONS AND DESIGN INTENT.
   制造商与 ASIG 设计师一起工作 , 确保正确比例和设计意图。

3. SHOP DRAWINGS ARE TO INDICATE COMPLETE DIMENSIONS, WOOD SPECIES, FINISH, BASIC CONSTRUCTION, AND ALL REQUIRED HARDWARE AND MUST SHOW ALL VISIBLE BLOCKING.
   施工图是显示完整的尺寸 , 木材品种 , 完成 , 基本结构与所有规定的五金配件和所有规定的五金配件

4. MANUFACTURER TO DESIGN AND PROVIDE ANY STRUCTURAL REINFORCEMENT ASIG REQUIRED AND ADVISE WHEN THE STRUCTURE REQUIREMENT IS IN CONFLICT WITHTHE DESIGN INTENT.
   制造商设计和提供任何结构性加固要求和建议杰璐设计时结构要求是在冲突与设计意图。

5. MANUFACTURER TO PROVIDE PROTOTYPE FOR ASIG APPROVAL FOR ALL SEATING AND ITEMS WITH LARGE QUANTITIES OR PER PROJECT IF THE SPECIFICATION REQUIRES IT.
   制造商提供原型杰璐设计所有座位和批准项目与大量或每个项目如果规范要求。

6. ALL WOOD TO BE KILN DRIED AND TREATED.
   所有木材烘干和处理过的

7. ALL MATERIAL TO BE CLEAN AND FREE OF PEST, AND WOOD WILL BE TERMITE FREE.
   所有材料保持清洁和防虫 , 和木材防虫。

8. ALL HARDWARE (HINGES, SCREWS, BOLTS, ETC) MUST BE CORROSION PROOF, AND MUST BE APPROPRIATELY DURABLE FOR APPLICATION.
   所有的硬件 (铰链、螺丝、螺栓等) 必须抗腐蚀，耐用。

9. ALL MATERIAL AND METHOD OF CONSTRUCTION MUST MEET OR EXCEED ALL STATE AND LOCAL FIRE & SAFETY CODES APPLICABLE TO PROJECTS LOCATION.
   所有材料与结构的必须符合或超过国际当地消防安全规范及条例。

10. ALL FURNITURE MUST BE CONTRACT QUALITY AND SUITABLE FOR COMMERCIAL USE. PRODUCT MUST BE STRUCTURALLY SOUND WITH PROPER PROPORTIONS TO PREVENTTIPPING.
    所有家具都必须合同质量和适合商业用途。产品结构牢固，带防翻装置。

ASIG DESIGN
杰 璐 设 计 工 作 室

LIGHTING SPECIFICATIONS
灯具规格说明书

LIGHTING 灯具

1 GENERAL INSTALLATION REQUIREMENTS
1 一般安装要求

1.1 PRIOR TO INSTALLATION, LAMPS AND ACCESSORIES SHOULD BE COMPLETE, AND THERE SHOULD BE NO MECHANICAL DAMAGE, DEFORMATION, PAINT PEELING AND LAMP COVER RUPTURE AND OTHER DEFECTS.
1.1 安装前，灯具及其配件应齐全，并应无机械损伤、变形、油漆剥落和灯罩破裂等缺陷。

1.2 ACCORDING TO THE INSTALLATION PLACE AND PURPOSE OF THE LAMP, THE MINIMUM CROSS SECTION OF THE CONDUCTOR WIRE CORE OF EACH LAMP SHOULD BE IN ACCORDANCE WITH THE RELEVANT REGULATIONS.
1.2 根据灯具的安装场所及用途，引向每个灯具的导线线芯最小截面应符合有关规程规范的规定。

1.3WHEN THE INSTALLATION OF ELECTRIC LIGHTING DEVICE IN MASONRY STRUCTURE, SHOULD BE USED FOR PRE BURIED HOOK, BOLTS, SCREWS, EXPANSION OF BOLTS, PLASTIC OR NYLON PLUG PLUG IS FIXED; IT IS FORBIDDEN TO USE THE WEDGE. WHEN THE DESIGN IS NOT PROVIDED, THE CARRYING CAPACITY OF THE ABOVE FIXED PARTS SHOULD BE MATCHED WITH THE WEIGHT OF THE ELECTRIC LIGHTING DEVICE.
1.3 当在砖石结构中安装电气照明装置时，应采用预埋吊钩、螺栓、螺钉、膨胀螺栓、尼龙塞或塑料塞固定；严禁使用木楔。当设计无规定时，上述固定件的承载能力应与电气照明装置的重量相匹配。

1.4 WHEN THE LAMP IS APART FROM THE GROUND HEIGHT IS LESS THAN 2.4 METERS, RATED VOLTAGE TO BE APPLIED TO 36 VOLTS AND BELOW THE LAMP OR TO TAKE PROTECTIVE MEASURES SHOULD BE IN MORE DANGEROUS AND MORE SPECIAL DANGEROUS PLACE. LAMPS AND LANTERNS SHALL NOT BE DIRECTLY MOUNTED ON A COMBUSTIBLE OBJECT; WHEN THE HIGH TEMPERATURE PART OF THE LAMP SURFACE IS CLOSE TO THE COMBUSTIBLE MATERIAL, HEAT INSULATION AND HEAT DISSIPATION MEASURES SHOULD BE TAKEN. IN THE SUBSTATION, HIGH VOLTAGE, LOW VOLTAGE POWER DISTRIBUTION EQUIPMENT AND THE BUS BAR IS ABOVE, SHOULD NOT INSTALL LAMPS. OUTDOOR INSTALLATION OF LAMPS, FROM THE HEIGHT OF THE GROUND SHOULD NOT BE LESS THAN 3 METERS; WHEN INSTALLED ON THE WALL, THE HEIGHT SHOULD NOT BE LESS THAN 2.5 METERS AWAY FROM THE GROUND
1.4 在危险性较大及特殊危险场所，当灯具距地面高度小于 2.4 米时，应使用额定电压为 36 伏及以下的照明灯具或采取保护措施。灯具不得直接安装在可燃物件上；当灯具表面高温部位靠近可燃物时，应采取隔热、散热措施。　在变电所内，高压、低压配电设备及母线的正上方，不应安装灯具。　室外安装的灯具，距地面的高度不宜小于 3 米；当在墙上安装时，距地面的高度不应小于 2.5 米。

2 REQUEST CONNECTION SCREW CAP
2 螺口灯头的接线要求

2.1 BE IN LINE TERMINAL CONTACTS, THE ZERO LINE SHOULD BE CONNECTED TO THE TERMINAL SCREW
2.1 相线应接在中心触点的端子上，零线应接在螺纹的端子上。

2.2 THE INSULATION SHELL SHOULD HAVE NO DAMAGE AND LEAKAGE OF THE LAMP
2.2 灯头的绝缘外壳不应有破损和漏电。

2.3 THE LAMP HOLDER WITH SWITCH, THE SWITCH HANDLE SHOULD NOT HAVE EXPOSED METAL PARTS. THE BULB SHOULD NOT BE CLOSE TO THE TOP OF THE LAMP, WHICH IS PROVIDED WITH AN INCANDESCENT LIGHT BULB, AND THE INSULATION MEASURES SHOULD BE TAKEN WHEN THE DISTANCE BETWEEN THE LAMP AND THE INSULATION IS LESS THAN 5 MM.
2.3 对带开关的灯头，开关手柄不应有裸露的金属部分。　对装有白炽灯泡的吸顶灯具，灯泡不应紧贴灯罩；当灯泡与绝缘台之间的距离小于 5 毫米时，灯泡与绝缘台之间应采取隔热措施。

铂尔曼自助餐厅
PULLMAN RESTAURANT

ISSUED 发表时间: 2020.1.22

LIGHTING LIST 灯具清单

灯具列表		
编号	名称	参考
F3	嵌入式射灯（角度不可调）	
F7	嵌入式射灯（角度可调）	
F10	嵌入式筒灯	
F13	悬挂式射灯（角度不可调）	
F17	悬挂式射灯（角度可调）	
F24	悬挂式筒灯	
F25	LED灯带	
F51	艺术吊灯	
F52	艺术吊灯	
F54	艺术吊灯	
F55	艺术落地灯	

灯具列表		
编号	名称	参考
F56	艺术吊灯	
F57	艺术吊灯	
F59	落地灯	
F60	艺术吊灯	
F61	艺术壁灯	
F62	艺术吊灯	
F63	艺术吊灯	
F64	艺术吊灯	
F65	艺术壁灯	

PURCHASING AGENT TO VERIFY ALL QUANTITIES AND PRICES PRIOR TO ORDER. PRICES ARE ESTIMATES ONLY FOR BUDGET PURPOSES. ALL PRICES AREFOR PRODUCT ONLY AND DO NOT INCLUDED SALES TAX, FREIGHT CHARGES, ETC. BUDGET DOES NOT INCLUDE ARTWORK, PLUMBING FIXTURES AND FITTINGS OR ACCESSORIES, EQUIPMENT (IE. TV)

采购代理之前验证所有数量和价格秩序。价格估计只对预算的目的。所有的价格都是
仅供产品，不包括营业税、运费，等。预算不包括艺术品、管道装置和配件或附件，设备（即。电视）

ASIG DESIGN
杰 璐 设 计 工 作 室

Control Principles

System Structure

The Philips Dynalite system is a scalable control platform that connects a range of intelligent devices to form a complete control solution. Commands and status information are passed to all devices over an RS485 or Ethernet network using the event-based DyNet protocol. Philips Dynalite control devices include an integrated microprocessor and internal non-volatile memory. This allows each device to store its own configuration data, handle processing requirements for its assigned features and functions, and remember some of its previous states. All device configurations are programmed through the EnvisionSuite series of commissioning, monitoring and control software.

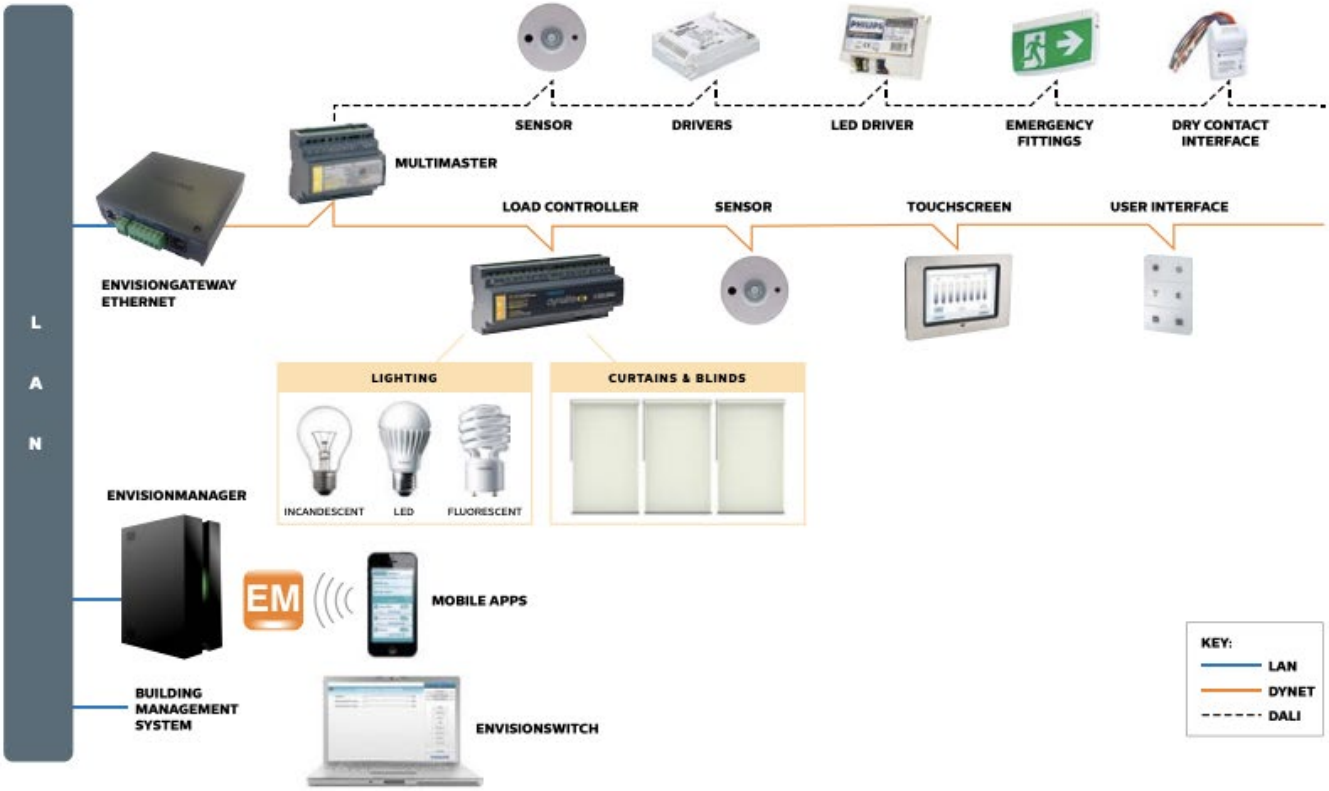

The system's distributed architecture offers excellent reliability and usability and provides flexible control of lighting and other building automation systems.

The range of Philips Dynalite control products includes user interfaces (UIs), integration devices and load controllers. The UI range includes:

- Control keypads
- LCD touchscreens
- timeclocks
- sensors
- mobile apps
- desktop software

ASIG DESIGN
杰 璐 设 计 工 作 室

NUMBER 灯具编号： F3

LIGHTING NAME 灯具名称： 嵌入式射灯 RECESSED SPOT LIGHT

MANUFACTURER 供应商：
SIKI 石客照明
CONTACT 联系人：
王海洋
EMAIL 电子邮件：
why5150085@163.com
TELEPHONE 电话：
18221900994

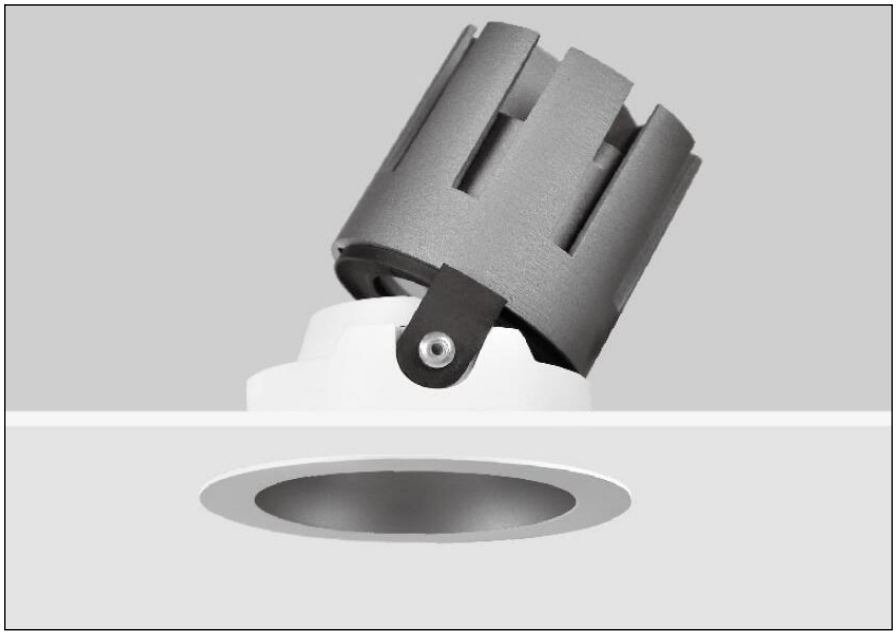

MODEL 型号：
SKC161205
NAME 名称：
嵌入射灯
DESCRIPTION 形容：

TYPE 分类：

WEB 网址：

SIZE 尺寸：
外直径 :75mm, 开孔: 65mm
BULB 灯泡：
射灯 LED5w
PRICE 价格：

SPECIFICATION 描述
1. 不可调；
2. 光束角：25 度
3. 色　温：2700K

MATERIAL 材料
金属 STEEL
COLOR 颜色：
黑色 BLACK, 白色 WHITE
SURFACE 表面：
哑光 MATTE

Manufacturer shall prepare shop drawings and/or prototype samples for checking and approval by JL prior to manufacture.
JL reserves the right to reject items that do not meet the specification requirements.
All specifications are the property of RS, and along with custom designs and prints, cannot be used without written permission. The same shall be returned at the completion of the work.
Do not scale drawings. All measurements must be checked at the site by the contractor or manufacturer.
Quantities listed are for reference only and are subject to change. Purchasing agent shall verify all quantities against plans prior to issuance of Purchase Orders.Any discrepancies shall be brought to the attention of JLprior to purchasing.Vendors to direct all queries through client’s purchasing agent. The images contained herein are not to be used for the engineering or manufacturing of the product depicted hereon. Manufacturer to be responsible for the engineering,functionality and durability of the final product. Neither these images nor the design intentreflected thereon shall be used in any manner which may result in an infringement of any copyrights, trademarks, patents or other intellectual property rights. Manufacturer shall be solely responsible for compliance with all applicable U.S. and other laws regarding copyrights,、trademarks, patents and intellectual property rights, and shall indemnify and hold JL and allof its related entities, harmless from any claims, damages or expenses resulting from any negligent or willful violation of the same. These images are for overall look and feel of the proposed design direction only, do not represent previous or future specifications,will not beimitated by RS, and are not to be used for the engineering or manufacturing of the product depicted hereon. Neither these images nor the design direction reflected thereon shall be used in any manner which may result in an infringement of any copyrights, trademarks,patents or other intellectual property rights. Please refer to the Table of Contents for specification issue.

制造商应当准备施工图和 / 或原型样品生产前检查和批准 LJ。
LJ 有权否决项不符合规范要求 . 所有的规格是的财产 , 以及定制的设计和打印 , 不能没有书面许可使用。同样应当退还的完成工作。
没有图纸。必须检查所有测量在现场由承包商或制造商。列出数量仅供参考 , 如有更改 , 恕。采购员应核实数量计划发行采购订单之前。供应商直接所有查询通过客户的采购代理。
本文所包含的图像不用于工程或制造产品的描述在此。制造商负责工程 , 功能和最终产品的耐用性。这些图像和设计 intentreflected 上应以任何方式使用 , 可能会导致任何的侵权行为版权、商标、专利或其他知识产权。制造商应当单独负责遵守所有适用的美国和其他涉及版权的法律 , 商标、专利和知识产权 , 并应赔偿并持有 , 所有其相关的实体 , 无害的任何索赔、损失或产生的任何费用疏忽或故意违反相同。这些图像的整体外观和感觉提出了设计方向 , 不代表之前或之后的规格 , 不会由 JL 模仿 , 不用于工程或产品的制造描述在此。这些图片和设计方向上应反映出来以任何方式使用 , 可能会导致侵犯任何版权、商标、专利或其他知识产权。请参阅表的内容规范的问题。

-ALL MEASUREMENTS TO BE VERIFIED AGAINST DRAWINGS AND CURRENT BUILDING CONDITIONS.
-MANUFACTURER TO PROVIDE SHOP DRAWINGS, DETAILS AND FINISH SAMPLES TO ASIG DESIGN FOR FINAL APPROVAL PRIOR TO PRODUCTION/INSTALLATION.
-ALL MATERIALS USED MUST MEET OR EXCEED ALL APPLICABLE FEDERAL, STATE AND LOCAL FLAME CODE REQUIREMENTS, INCLUDING CHINA
-MUST BE CONTRACT QUALITY AND SUITABLE FOR HEAVY COMMERCIAL USE.
-MUST MEET OR EXCEED ALL REQUIREMENTS OF ASIG DESIGN’S FURNITURE GENERAL NOTES.

- 所有尺寸须与图纸及现在情况核实
- 制造商须与生产或安装前向客人提供图纸有样板以作最后批核
- 所有物料须符合或超于所有适用国家或当地之防火条例标准，包括中国大 陸
- 须符合合同品质及适合重商业用途
- 须符合或超于所有客户家具综述内之标准要求

ASIG DESIGN
杰 璐 设 计 工 作 室

NUMBER 灯具编号： F7

LIGHTING NAME 灯具名称： 嵌入式射灯 RECESSED SPOT LIGHT

MANUFACTURER 供应商：
SIKI 石客照明

CONTACT 联系人：
王海洋

EMAIL 电子邮件：
why5150085@163.com

TELEPHONE 电话：
18221900994

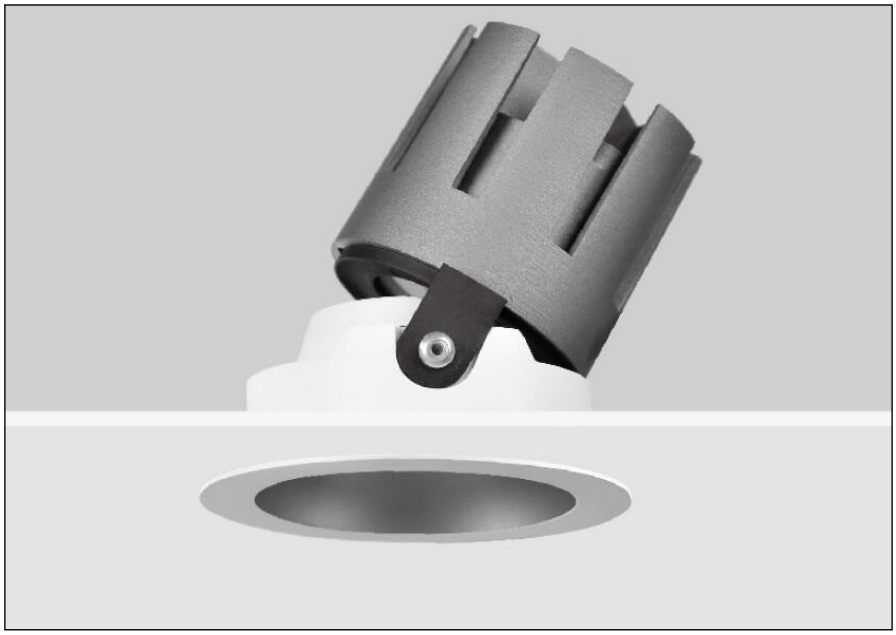

MODEL 型号：
SKC161205

NAME 名称：
嵌入射灯

DESCRIPTION 形容：

TYPE 分类：

WEB 网址：

SPECIFICATION 描述
1. 可调；
2. 光束角：25 度
3. 色　温：2700K

MATERIAL 材料
金属 STEEL

COLOR 颜色：
黑色 BLACK, 白色 WHITE

SURFACE 表面：
哑光 MATTE

SIZE 尺寸：
外直径 :75mm, 开孔: 65mm

BULB 灯泡：
射灯 LED5w

PRICE 价格：

Manufacturer shall prepare shop drawings and/or prototype samples for checking and approval by JL prior to manufacture.
JL reserves the right to reject items that do not meet the specification requirements.
All specifications are the property of RS, and along with custom designs and prints, cannot be used without written permission. The same shall be returned at the completion of the work.
Do not scale drawings. All measurements must be checked at the site by the contractor or manufacturer.
Quantities listed are for reference only and are subject to change. Purchasing agent shall verify all quantities against plans prior to issuance of Purchase Orders.Any discrepancies shall be brought to the attention of JLprior to purchasing.Vendors to direct all queries through client’s purchasing agent. The images contained herein are not to be used for the engineering or manufacturing of the product depicted hereon. Manufacturer to be responsible for the engineering,functionality and durability of the final product. Neither these images nor the design intentreflected thereon shall be used in any manner which may result in an infringement of any copyrights, trademarks, patents or other intellectual property rights. Manufacturer shall be solely responsible for compliance with all applicable U.S. and other laws regarding copyrights,、trademarks, patents and intellectual property rights, and shall indemnify and hold JL and allof its related entities, harmless from any claims, damages or expenses resulting from any negligent or willful violation of the same. These images are for overall look and feel of the proposed design direction only, do not represent previous or future specifications,will not beimitated by RS, and are not to be used for the engineering or manufacturing of the product depicted hereon. Neither these images nor the design direction reflected thereon shall be used in any manner which may result in an infringement of any copyrights, trademarks,patents or other intellectual property rights. Please refer to the Table of Contents for specification issue.

制造商应当准备施工图和 / 或原型样品生产前检查和批准 LJ。
LJ 有权否决项不符合规范要求 . 所有的规格是的财产 , 以及定制的设计和打印 , 不能没有书面许可使用。同样应当退还的完成工作。
没有图纸。必须检查所有测量在现场由承包商或制造商。列出数量仅供参考 , 如有更改 , 恕。采购员应核实数量计划发行采购订单之前。供应商直接所有查询通过客户的采购代理。
本文所包含的图像不用于工程或制造产品的描述在此。制造商负责工程 , 功能和最终产品的耐用性。这些图像和设计 intentreflected 上应以任何方式使用 , 可能会导致任何的侵权行为版权、商标、专利或其他知识产权。制造商应当单独负责遵守所有适用的美国和其他涉及版权的法律 , 商标、专利和知识产权 , 并应赔偿并持有 , 所有其相关的实体 , 无害的任何索赔、损失或产生的任何费用疏忽或故意违反相同。这些图像的整体外观和感觉提出了设计方向 , 不代表之前或之后的规格 , 不会由 JL 模仿 , 不用于工程或产品的制造描述在此。这些图片和设计方向上应反映出来以任何方式使用 , 可能会导致侵犯任何版权、商标、专利或其他知识产权。请参阅表的内容规范的问题。

-ALL MEASUREMENTS TO BE VERIFIED AGAINST DRAWINGS AND CURRENT BUILDING CONDITIONS.
-MANUFACTURER TO PROVIDE SHOP DRAWINGS, DETAILS AND FINISH SAMPLES TO ASIG DESIGN FOR FINAL APPROVAL PRIOR TO PRODUCTION/INSTALLATION.
-ALL MATERIALS USED MUST MEET OR EXCEED ALL APPLICABLE FEDERAL, STATE AND LOCAL FLAME CODE REQUIREMENTS, INCLUDING CHINA
-MUST BE CONTRACT QUALITY AND SUITABLE FOR HEAVY COMMERCIAL USE.
-MUST MEET OR EXCEED ALL REQUIREMENTS OF ASIG DESIGN’S FURNITURE GENERAL NOTES.

- 所有尺寸须与图纸及现在情况核实
- 制造商须与生产或安装前向客人提供图纸有样板以作最后批核
- 所有物料须符合或超于所有适用国家或当地之防火条例标准，包括中国大 陸
- 须符合合同品质及适合重商业用途
- 须符合或超于所有客户家具综述内之标准要求

ASIG DESIGN
杰 璐 设 计 工 作 室

NUMBER 灯具编号： F10

LIGHTING NAME 灯具名称： 嵌入式筒灯 RECESSED CAN LIGHT

MANUFACTURER 供应商：
SIKI 石客照明

CONTACT 联系人：
王海洋

EMAIL 电子邮件：
why5150085@163.com

TELEPHONE 电话：
18221900994

MODEL 型号：
SKF020207

NAME 名称：
LED 筒灯

DESCRIPTION 形容：

TYPE 分类：

WEB 网址：

SPECIFICATION 描述
色温：4000k

MATERIAL 材料
铝材 ALUMINUM

COLOR 颜色：
白色 WHITE

SURFACE 表面：
哑光 MATTE

SIZE 尺寸：
外直径 :105mm, 开孔: 95mm

BULB 灯泡：
7W LED

PRICE 价格：

Manufacturer shall prepare shop drawings and/or prototype samples for checking and approval by JL prior to manufacture.
JL reserves the right to reject items that do not meet the specification requirements.
All specifications are the property of RS, and along with custom designs and prints, cannot be used without written permission. The same shall be returned at the completion of the work.
Do not scale drawings. All measurements must be checked at the site by the contractor or manufacturer.
Quantities listed are for reference only and are subject to change. Purchasing agent shall verify all quantities against plans prior to issuance of Purchase Orders.Any discrepancies shall be brought to the attention of JLprior to purchasing.Vendors to direct all queries through client’s purchasing agent. The images contained herein are not to be used for the engineering or manufacturing of the product depicted hereon. Manufacturer to be responsible for the engineering,functionality and durability of the final product. Neither these images nor the design intentreflected thereon shall be used in any manner which may result in an infringement of any copyrights, trademarks, patents or other intellectual property rights. Manufacturer shall be solely responsible for compliance with all applicable U.S. and other laws regarding copyrights,、trademarks, patents and intellectual property rights, and shall indemnify and hold JL and allof its related entities, harmless from any claims, damages or expenses resulting from any negligent or willful violation of the same. These images are for overall look and feel of the proposed design direction only, do not represent previous or future specifications,will not beimitated by RS, and are not to be used for the engineering or manufacturing of the product depicted hereon. Neither these images nor the design direction reflected thereon shall be used in any manner which may result in an infringement of any copyrights, trademarks,patents or other intellectual property rights. Please refer to the Table of Contents for specification issue.

制造商应当准备施工图和 / 或原型样品生产前检查和批准 LJ。
LJ 有权否决项不符合规范要求 . 所有的规格是的财产 , 以及定制的设计和打印 , 不能没有书面许可使用。同样应当退还的完成工作。
没有图纸。必须检查所有测量在现场由承包商或制造商。列出数量仅供参考 , 如有更改 , 恕。采购员应核实数量计划发行采购订单之前。供应商直接所有查询通过客户的采购代理。
本文所包含的图像不用于工程或制造产品的描述在此。制造商负责工程 , 功能和最终产品的耐用性。这些图像和设计 intentreflected 上应以任何方式使用 , 可能会导致任何的侵权行为版权、商标、专利或其他知识产权。制造商应当单独负责遵守所有适用的美国和其他涉及版权的法律 , 商标、专利和知识产权 , 并应赔偿并持有 , 所有其相关的实体 , 无害的任何索赔、损失或产生的任何费用疏忽或故意违反相同。这些图像的整体外观和感觉提出了设计方向 , 不代表之前或之后的规格 , 不会由 JL 模仿 , 不用于工程或产品的制造描述在此。这些图片和设计方向上应反映出来以任何方式使用 , 可能会导致侵犯任何版权、商标、专利或其他知识产权。请参阅表的内容规范的问题。

-ALL MEASUREMENTS TO BE VERIFIED AGAINST DRAWINGS AND CURRENT BUILDING CONDITIONS.
-MANUFACTURER TO PROVIDE SHOP DRAWINGS, DETAILS AND FINISH SAMPLES TO ASIG DESIGN FOR FINAL APPROVAL PRIOR TO PRODUCTION/INSTALLATION.
-ALL MATERIALS USED MUST MEET OR EXCEED ALL APPLICABLE FEDERAL, STATE AND LOCAL FLAME CODE REQUIREMENTS, INCLUDING CHINA
-MUST BE CONTRACT QUALITY AND SUITABLE FOR HEAVY COMMERCIAL USE.
-MUST MEET OR EXCEED ALL REQUIREMENTS OF ASIG DESIGN’S FURNITURE GENERAL NOTES.

- 所有尺寸须与图纸及现在情况核实
- 制造商须与生产或安装前向客人提供图纸有样板以作最后批核
- 所有物料须符合或超于所有适用国家或当地之防火条例标准，包括中国大 陸
- 须符合合同品质及适合重商业用途
- 须符合或超于所有客户家具综述内之标准要求

ASIG DESIGN
杰 璐 设 计 工 作 室

NUMBER 灯具编号： F13

LIGHTING NAME 灯具名称： 挂式射灯 HANGING SPOT LIGHT

MANUFACTURER 供应商：
SIKI 石客照明

CONTACT 联系人：
王海洋

EMAIL 电子邮件：
why5150085@163.com

TELEPHONE 电话：
18221900994

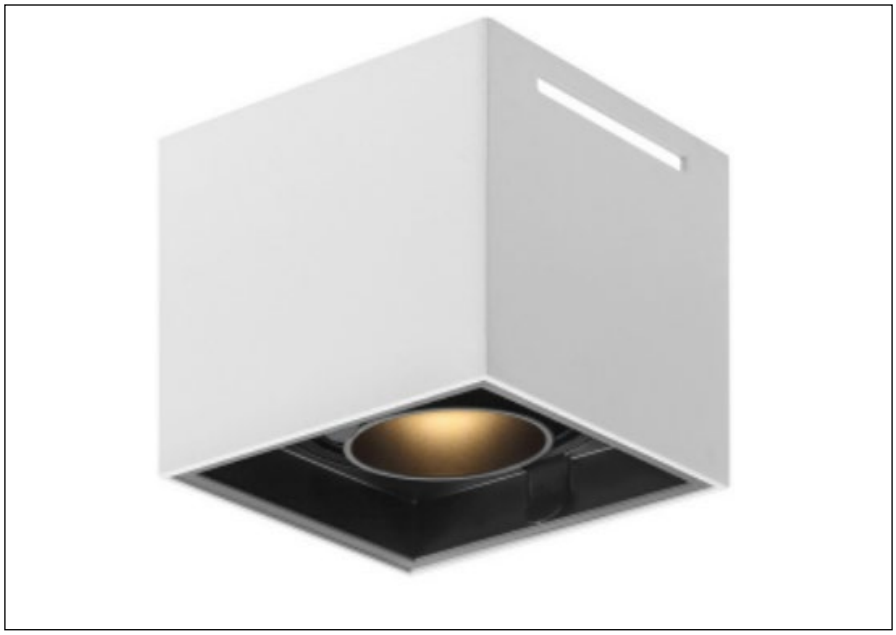

MODEL 型号：
SKF106207

NAME 名称：
明装悬挂式射灯

DESCRIPTION 形容：

TYPE 分类：

WEB 网址：

SIZE 尺寸：
57x57x92mm

BULB 灯泡：
7W LED

PRICE 价格：

SPECIFICATION 描述
1. 无角度
2. 光束角度：25 度
2. 色　　温：2700k
3. 数　　量：

MATERIAL 材料
金属 STEEL

COLOR 颜色：
黑色 BLACK

SURFACE 表面：
哑光 MATTE

Manufacturer shall prepare shop drawings and/or prototype samples for checking and approval by JL prior to manufacture.
JL reserves the right to reject items that do not meet the specification requirements.
All specifications are the property of RS, and along with custom designs and prints, cannot be used without written permission. The same shall be returned at the completion of the work.
Do not scale drawings. All measurements must be checked at the site by the contractor or manufacturer.
Quantities listed are for reference only and are subject to change. Purchasing agent shall verify all quantities against plans prior to issuance of Purchase Orders.Any discrepancies shall be brought to the attention of JLprior to purchasing.Vendors to direct all queries through client’s purchasing agent. The images contained herein are not to be used for the engineering or manufacturing of the product depicted hereon. Manufacturer to be responsible for the engineering,functionality and durability of the final product. Neither these images nor the design intentreflected thereon shall be used in any manner which may result in an infringement of any copyrights, trademarks, patents or other intellectual property rights. Manufacturer shall be solely responsible for compliance with all applicable U.S. and other laws regarding copyrights,、trademarks, patents and intellectual property rights, and shall indemnify and hold JL and allof its related entities, harmless from any claims, damages or expenses resulting from any negligent or willful violation of the same. These images are for overall look and feel of the proposed design direction only, do not represent previous or future specifications,will not beimitated by RS, and are not to be used for the engineering or manufacturing of the product depicted hereon. Neither these images nor the design direction reflected thereon shall be used in any manner which may result in an infringement of any copyrights, trademarks,patents or other intellectual property rights. Please refer to the Table of Contents for specification issue.

制造商应当准备施工图和 / 或原型样品生产前检查和批准 LJ。
LJ 有权否决项不符合规范要求 . 所有的规格是的财产 , 以及定制的设计和打印 , 不能没有书面许可使用。同样应当退还的完成工作。
没有图纸。必须检查所有测量在现场由承包商或制造商。列出数量仅供参考 , 如有更改 , 恕。
采购员应核实数量计划发行采购订单之前。供应商直接所有查询通过客户的采购代理。
本文所包含的图像不用于工程或制造产品的描述在此。制造商负责工程 , 功能和最终产品的耐用性。这些图像和设计 intentreflected 上应以任何方式使用 , 可能会导致任何的侵权行为版权、商标、专利或其他知识产权。制造商应当单独负责遵守所有适用的美国和其他涉及版权的法律 , 商标、专利和知识产权 , 并应赔偿并持有 , 所有其相关的实体 , 无害的任何索赔、损失或产生的任何费用疏忽或故意违反相同。这些图像的整体外观和感觉提出了设计方向 , 不代表之前或之后的规格 , 不会由 JL 模仿 , 不用于工程或产品的制造描述在此。
这些图片和设计方向上应反映出来以任何方式使用 , 可能会导致侵犯任何版权、商标、专利或其他知识产权。请参阅表的内容规范的问题。

-ALL MEASUREMENTS TO BE VERIFIED AGAINST DRAWINGS AND CURRENT BUILDING CONDITIONS.
-MANUFACTURER TO PROVIDE SHOP DRAWINGS, DETAILS AND FINISH SAMPLES TO ASIG DESIGN FOR FINAL APPROVAL PRIOR TO PRODUCTION/INSTALLATION.
-ALL MATERIALS USED MUST MEET OR EXCEED ALL APPLICABLE FEDERAL, STATE AND LOCAL FLAME CODE REQUIREMENTS, INCLUDING CHINA
-MUST BE CONTRACT QUALITY AND SUITABLE FOR HEAVY COMMERCIAL USE.
-MUST MEET OR EXCEED ALL REQUIREMENTS OF ASIG DESIGN’S FURNITURE GENERAL NOTES.

- 所有尺寸须与图纸及现在情况核实
- 制造商须与生产或安装前向客人提供图纸有样板以作最后批核
- 所有物料须符合或超于所有适用国家或当地之防火条例标准，包括中国大 陆
- 须符合合同品质及适合重商业用途
- 须符合或超于所有客户家具综述内之标准要求

ASIG DESIGN
杰 璐 设 计 工 作 室

NUMBER 灯具编号： F17

LIGHTING NAME 灯具名称： 挂式射灯 HANGING SPOT LIGHT

MANUFACTURER 供应商：
SIKI 石客照明

CONTACT 联系人：
王海洋

EMAIL 电子邮件：
why5150085@163.com

TELEPHONE 电话：
18221900994

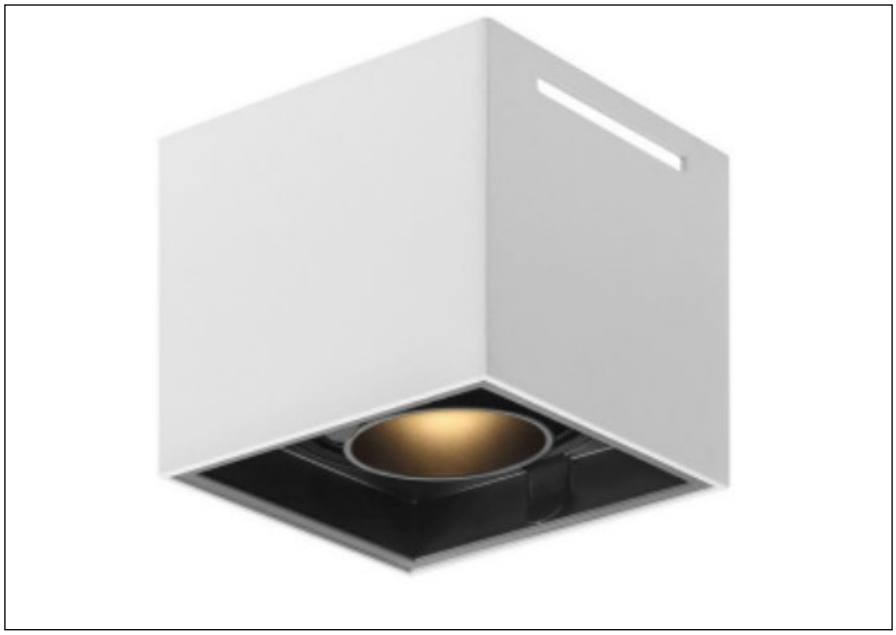

MODEL 型号：
SKF106207

NAME 名称：
明装悬挂式射灯

DESCRIPTION 形容：

TYPE 分类：

WEB 网址：

SIZE 尺寸：
57x57x92mm

BULB 灯泡：
7W LED

PRICE 价格：

SPECIFICATION 描述
1. 有角度；
2. 光束角度：25 度
3. 色　　温：2700k
4. 数　　量：

MATERIAL 材料
金属 STEEL

COLOR 颜色：
黑色 BLACK

SURFACE 表面：
哑光 MATTE

Manufacturer shall prepare shop drawings and/or prototype samples for checking and approval by JL prior to manufacture.
JL reserves the right to reject items that do not meet the specification requirements.
All specifications are the property of RS, and along with custom designs and prints, cannot be used without written permission. The same shall be returned at the completion of the work.
Do not scale drawings. All measurements must be checked at the site by the contractor or manufacturer.
Quantities listed are for reference only and are subject to change. Purchasing agent shall verify all quantities against plans prior to issuance of Purchase Orders.Any discrepancies shall be brought to the attention of JLprior to purchasing.Vendors to direct all queries through client’s purchasing agent. The images contained herein are not to be used for the engineering or manufacturing of the product depicted hereon. Manufacturer to be responsible for the engineering,functionality and durability of the final product. Neither these images nor the design intentreflected thereon shall be used in any manner which may result in an infringement of any copyrights, trademarks, patents or other intellectual property rights. Manufacturer shall be solely responsible for compliance with all applicable U.S. and other laws regarding copyrights,、trademarks, patents and intellectual property rights, and shall indemnify and hold JL and allof its related entities, harmless from any claims, damages or expenses resulting from any negligent or willful violation of the same. These images are for overall look and feel of the proposed design direction only, do not represent previous or future specifications,will not beimitated by RS, and are not to be used for the engineering or manufacturing of the product depicted hereon. Neither these images nor the design direction reflected thereon shall be used in any manner which may result in an infringement of any copyrights, trademarks,patents or other intellectual property rights. Please refer to the Table of Contents for specification issue.

制造商应当准备施工图和 / 或原型样品生产前检查和批准 LJ。
LJ 有权否决项不符合规范要求 . 所有的规格是的财产 , 以及定制的设计和打印 , 不能没有书面许可使用。同样应当退还的完成工作。
没有图纸。必须检查所有测量在现场由承包商或制造商。列出数量仅供参考 , 如有更改 , 恕。
采购员应核实数量计划发行采购订单之前。供应商直接所有查询通过客户的采购代理。
本文所包含的图像不用于工程或制造产品的描述在此。制造商负责工程 , 功能和最终产品的耐用性。这些图像和设计 intentreflected 上应以任何方式使用 , 可能会导致任何的侵权行为版权、商标、专利或其他知识产权。制造商应当单独负责遵守所有适用的美国和其他涉及版权的法律 , 商标、专利和知识产权 , 并应赔偿并持有 , 所有其相关的实体 , 无害的任何索赔、损失或产生的任何费用疏忽或故意违反相同。这些图像的整体外观和感觉提出了设计方向 , 不代表之前或之后的规格 , 不会由 JL 模仿 , 不用于工程或产品的制造描述在此。
这些图片和设计方向上应反映出来以任何方式使用 , 可能会导致侵犯任何版权、商标、专利或其他知识产权。请参阅表的内容规范的问题。

-ALL MEASUREMENTS TO BE VERIFIED AGAINST DRAWINGS AND CURRENT BUILDING CONDITIONS.
-MANUFACTURER TO PROVIDE SHOP DRAWINGS, DETAILS AND FINISH SAMPLES TO ASIG DESIGN FOR FINAL APPROVAL PRIOR TO PRODUCTION/INSTALLATION.
-ALL MATERIALS USED MUST MEET OR EXCEED ALL APPLICABLE FEDERAL, STATE AND LOCAL FLAME CODE REQUIREMENTS, INCLUDING CHINA
-MUST BE CONTRACT QUALITY AND SUITABLE FOR HEAVY COMMERCIAL USE.
-MUST MEET OR EXCEED ALL REQUIREMENTS OF ASIG DESIGN’S FURNITURE GENERAL NOTES.

- 所有尺寸须与图纸及现在情况核实
- 制造商须与生产或安装前向客人提供图纸有样板以作最后批核
- 所有物料须符合或超于所有适用国家或当地之防火条例标准，包括中国大 陸
- 须符合合同品质及适合重商业用途
- 须符合或超于所有客户家具综述内之标准要求

ASIG DESIGN
杰 璐 设 计 工 作 室

NUMBER 灯具编号： F24

LIGHTING NAME 灯具名称： 挂式筒灯 HANGING CAN LIGHT

MANUFACTURER 供应商：
SIKI 石客照明
CONTACT 联系人：
王海洋
EMAIL 电子邮件：
why5150085@163.com
TELEPHONE 电话：
18221900994

MODEL 型号：
SKF105420
NAME 名称：
明装筒灯
DESCRIPTION 形容：

TYPE 分类：

WEB 网址：

SPECIFICATION 描述
1. 色温：4000k

MATERIAL 材料
铝材 ALUMINUM
COLOR 颜色：
黑色 BLACK
SURFACE 表面：
哑光 MATTE

SIZE 尺寸：
外直径 :104mm 高 :142mm
BULB 灯泡：
20w
PRICE 价格：

Manufacturer shall prepare shop drawings and/or prototype samples for checking and approval by JL prior to manufacture.
JL reserves the right to reject items that do not meet the specification requirements.
All specifications are the property of RS, and along with custom designs and prints, cannot be used without written permission. The same shall be returned at the completion of the work.
Do not scale drawings. All measurements must be checked at the site by the contractor or manufacturer.
Quantities listed are for reference only and are subject to change. Purchasing agent shall verify all quantities against plans prior to issuance of Purchase Orders.Any discrepancies shall be brought to the attention of JLprior to purchasing.Vendors to direct all queries through client’s purchasing agent. The images contained herein are not to be used for the engineering or manufacturing of the product depicted hereon. Manufacturer to be responsible for the engineering,functionality and durability of the final product. Neither these images nor the design intentreflected thereon shall be used in any manner which may result in an infringement of any copyrights, trademarks, patents or other intellectual property rights. Manufacturer shall be solely responsible for compliance with all applicable U.S. and other laws regarding copyrights,、trademarks, patents and intellectual property rights, and shall indemnify and hold JL and allof its related entities, harmless from any claims, damages or expenses resulting from any negligent or willful violation of the same. These images are for overall look and feel of the proposed design direction only, do not represent previous or future specifications,will not beimitated by RS, and are not to be used for the engineering or manufacturing of the product depicted hereon. Neither these images nor the design direction reflected thereon shall be used in any manner which may result in an infringement of any copyrights, trademarks,patents or other intellectual property rights. Please refer to the Table of Contents for specification issue.

制造商应当准备施工图和 / 或原型样品生产前检查和批准 LJ。
LJ 有权否决项不符合规范要求 . 所有的规格是的财产 , 以及定制的设计和打印 , 不能没有书面许可使用。同样应当退还的完成工作。
没有图纸。必须检查所有测量在现场由承包商或制造商。列出数量仅供参考 , 如有更改 , 恕。
采购员应核实数量计划发行采购订单之前。供应商直接所有查询通过客户的采购代理。
本文所包含的图像不用于工程或制造产品的描述在此。制造商负责工程 , 功能和最终产品的耐用性。这些图像和设计 intentreflected 上应以任何方式使用 , 可能会导致任何的侵权行为版权、商标、专利或其他知识产权。制造商应当单独负责遵守所有适用的美国和其他涉及版权的法律 , 商标、专利和知识产权 , 并应赔偿并持有 , 所有其相关的实体 , 无害的任何索赔、损失或产生的任何费用疏忽或故意违反相同。这些图像的整体外观和感觉提出了设计方向 , 不代表之前或之后的规格 , 不会由 JL 模仿 , 不用于工程或产品的制造描述在此。
这些图片和设计方向上应反映出来以任何方式使用 , 可能会导致侵犯任何版权、商标、专利或其他知识产权。请参阅表的内容规范的问题。

-ALL MEASUREMENTS TO BE VERIFIED AGAINST DRAWINGS AND CURRENT BUILDING CONDITIONS.
-MANUFACTURER TO PROVIDE SHOP DRAWINGS, DETAILS AND FINISH SAMPLES TO ASIG DESIGN FOR FINAL APPROVAL PRIOR TO PRODUCTION/INSTALLATION.
-ALL MATERIALS USED MUST MEET OR EXCEED ALL APPLICABLE FEDERAL, STATE AND LOCAL FLAME CODE REQUIREMENTS, INCLUDING CHINA
-MUST BE CONTRACT QUALITY AND SUITABLE FOR HEAVY COMMERCIAL USE.
-MUST MEET OR EXCEED ALL REQUIREMENTS OF ASIG DESIGN’S FURNITURE GENERAL NOTES.

- 所有尺寸须与图纸及现在情况核实
- 制造商须与生产或安装前向客人提供图纸有样板以作最后批核
- 所有物料须符合或超于所有适用国家或当地之防火条例标准，包括中国大 陆
- 须符合合同品质及适合重商业用途
- 须符合或超于所有客户家具综述内之标准要求

ASIG DESIGN
杰 璐 设 计 工 作 室

NUMBER 灯具编号： F25

LIGHTING NAME 灯具名称： LED 灯带 LED ROPE LIGHT

MANUFACTURER 供应商：
极成光电

CONTACT 联系人：
王海洋

EMAIL 电子邮件：
why5150085@163.com

TELEPHONE 电话：
18221900994

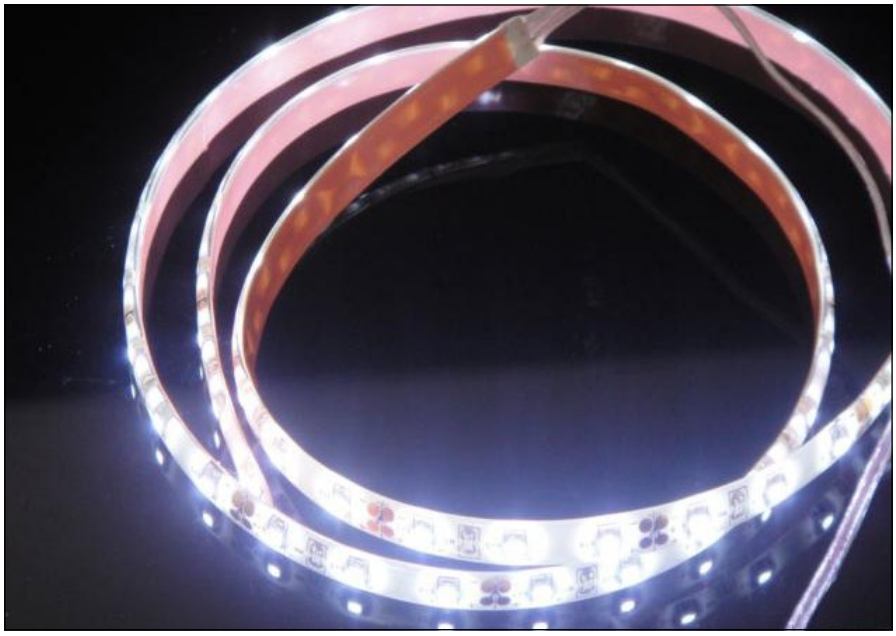

MODEL 型号：
PT5027

NAME 名称：
LED 软灯带

DESCRIPTION 形容：

TYPE 分类：

WEB 网址：

SPECIFICATION 描述
1. 功率：14.4W/m
2. 色温：3000k

MATERIAL 材料

COLOR 颜色：

SIZE 尺寸：

SURFACE 表面：

BULB 灯泡：
LED 3000k (暖白)

PRICE 价格：

Manufacturer shall prepare shop drawings and/or prototype samples for checking and approval by JL prior to manufacture.
JL reserves the right to reject items that do not meet the specification requirements.
All specifications are the property of RS, and along with custom designs and prints, cannot be used without written permission. The same shall be returned at the completion of the work.
Do not scale drawings. All measurements must be checked at the site by the contractor or manufacturer.
Quantities listed are for reference only and are subject to change. Purchasing agent shall verify all quantities against plans prior to issuance of Purchase Orders.Any discrepancies shall be brought to the attention of JLprior to purchasing.Vendors to direct all queries through client’s purchasing agent. The images contained herein are not to be used for the engineering or manufacturing of the product depicted hereon. Manufacturer to be responsible for the engineering,functionality and durability of the final product. Neither these images nor the design intentreflected thereon shall be used in any manner which may result in an infringement of any copyrights, trademarks, patents or other intellectual property rights. Manufacturer shall be solely responsible for compliance with all applicable U.S. and other laws regarding copyrights,、trademarks, patents and intellectual property rights, and shall indemnify and hold JL and allof its related entities, harmless from any claims, damages or expenses resulting from any negligent or willful violation of the same. These images are for overall look and feel of the proposed design direction only, do not represent previous or future specifications,will not beimitated by RS, and are not to be used for the engineering or manufacturing of the product depicted hereon. Neither these images nor the design direction reflected thereon shall be used in any manner which may result in an infringement of any copyrights, trademarks,patents or other intellectual property rights. Please refer to the Table of Contents for specification issue.

制造商应当准备施工图和 / 或原型样品生产前检查和批准 LJ。
LJ 有权否决项不符合规范要求 . 所有的规格是的财产 , 以及定制的设计和打印 , 不能没有书面许可使用。同样应当退还的完成工作。
没有图纸。必须检查所有测量在现场由承包商或制造商。列出数量仅供参考 , 如有更改 , 恕。采购员应核实数量计划发行采购订单之前。供应商直接所有查询通过客户的采购代理。
本文所包含的图像不用于工程或制造产品的描述在此。制造商负责工程 , 功能和最终产品的耐用性。这些图像和设计 intentreflected 上应以任何方式使用 , 可能会导致任何的侵权行为版权、商标、专利或其他知识产权。制造商应当单独负责遵守所有适用的美国和其他涉及版权的法律 , 商标、专利和知识产权 , 并应赔偿并持有 , 所有其相关的实体 , 无害的任何索赔、损失或产生的任何费用疏忽或故意违反相同。这些图像的整体外观和感觉提出了设计方向 , 不代表之前或之后的规格 , 不会由 JL 模仿 , 不用于工程或产品的制造描述在此。这些图片和设计方向上应反映出来以任何方式使用 , 可能会导致侵犯任何版权、商标、专利或其他知识产权。请参阅表的内容规范的问题。

-ALL MEASUREMENTS TO BE VERIFIED AGAINST DRAWINGS AND CURRENT BUILDING CONDITIONS.
-MANUFACTURER TO PROVIDE SHOP DRAWINGS, DETAILS AND FINISH SAMPLES TO ASIG DESIGN FOR FINAL APPROVAL PRIOR TO PRODUCTION/INSTALLATION.
-ALL MATERIALS USED MUST MEET OR EXCEED ALL APPLICABLE FEDERAL, STATE AND LOCAL FLAME CODE REQUIREMENTS, INCLUDING CHINA
-MUST BE CONTRACT QUALITY AND SUITABLE FOR HEAVY COMMERCIAL USE.
-MUST MEET OR EXCEED ALL REQUIREMENTS OF ASIG DESIGN’S FURNITURE GENERAL NOTES.

- 所有尺寸须与图纸及现在情况核实
- 制造商须与生产或安装前向客人提供图纸有样板以作最后批核
- 所有物料须符合或超于所有适用国家或当地之防火条例标准，包括中国大 陆
- 须符合合同品质及适合重商业用途
- 须符合或超于所有客户家具综述内之标准要求

ASIG DESIGN
杰 璐 设 计 工 作 室

NUMBER 灯具编号： F51

LIGHTING NAME 灯具名称： 艺术吊灯 PENDANT LIGHT

MANUFACTURER 供应商：
瑞瑟迪软装设计

CONTACT 联系人：
从前曼

EMAIL 电子邮件：

TELEPHONE 电话：
18302132218

MODEL 型号：
1019580

NAME 名称：

DESCRIPTION 形容：

TYPE 分类：

WEB 网址：

SIZE 尺寸：
直径 350mm

BULB 灯泡：
LED

PRICE 价格：

SPECIFICATION 描述
1. 原有基础上做调整
2. 灯球底部加射灯
3. 取消链条，吊线用钢丝

MATERIAL 材料
金属 METAL，玻璃 GLASS

COLOR 颜色：
金色 GOLD

SURFACE 表面：
拉丝 BRUSHED

Manufacturer shall prepare shop drawings and/or prototype samples for checking and approval by JL prior to manufacture.
JL reserves the right to reject items that do not meet the specification requirements.
All specifications are the property of RS, and along with custom designs and prints, cannot be used without written permission. The same shall be returned at the completion of the work.
Do not scale drawings. All measurements must be checked at the site by the contractor or manufacturer.
Quantities listed are for reference only and are subject to change. Purchasing agent shall verify all quantities against plans prior to issuance of Purchase Orders.Any discrepancies shall be brought to the attention of JLprior to purchasing.Vendors to direct all queries through client’s purchasing agent. The images contained herein are not to be used for the engineering or manufacturing of the product depicted hereon. Manufacturer to be responsible for the engineering,functionality and durability of the final product. Neither these images nor the design intentreflected thereon shall be used in any manner which may result in an infringement of any copyrights, trademarks, patents or other intellectual property rights. Manufacturer shall be solely responsible for compliance with all applicable U.S. and other laws regarding copyrights,、trademarks, patents and intellectual property rights, and shall indemnify and hold JL and allof its related entities, harmless from any claims, damages or expenses resulting from any negligent or willful violation of the same. These images are for overall look and feel of the proposed design direction only, do not represent previous or future specifications,will not beimitated by RS, and are not to be used for the engineering or manufacturing of the product depicted hereon. Neither these images nor the design direction reflected thereon shall be used in any manner which may result in an infringement of any copyrights, trademarks,patents or other intellectual property rights. Please refer to the Table of Contents for specification issue.

制造商应当准备施工图和 / 或原型样品生产前检查和批准 LJ。
LJ 有权否决项不符合规范要求 . 所有的规格是的财产 , 以及定制的设计和打印 , 不能没有书面许可使用。同样应当退还的完成工作。
没有图纸。必须检查所有测量在现场由承包商或制造商。列出数量仅供参考 , 如有更改 , 恕。
采购员应核实数量计划发行采购订单之前。供应商直接所有查询通过客户的采购代理。
本文所包含的图像不用于工程或制造产品的描述在此。制造商负责工程 , 功能和最终产品的耐用性。这些图像和设计 intentreflected 上应以任何方式使用 , 可能会导致任何的侵权行为版权、商标、专利或其他知识产权。制造商应当单独负责遵守所有适用的美国和其他涉及版权的法律 , 商标、专利和知识产权 , 并应赔偿并持有 , 所有其相关的实体 , 无害的任何索赔、损失或产生的任何费用疏忽或故意违反相同。这些图像的整体外观和感觉提出了设计方向 , 不代表之前或之后的规格 , 不会由 JL 模仿 , 不用于工程或产品的制造描述在此。这些图片和设计方向上应反映出来以任何方式使用 , 可能会导致侵犯任何版权、商标、专利或其他知识产权。请参阅表的内容规范的问题。

-ALL MEASUREMENTS TO BE VERIFIED AGAINST DRAWINGS AND CURRENT BUILDING CONDITIONS.
-MANUFACTURER TO PROVIDE SHOP DRAWINGS, DETAILS AND FINISH SAMPLES TO ASIG DESIGN FOR FINAL APPROVAL PRIOR TO PRODUCTION/INSTALLATION.
-ALL MATERIALS USED MUST MEET OR EXCEED ALL APPLICABLE FEDERAL, STATE AND LOCAL FLAME CODE REQUIREMENTS, INCLUDING CHINA
-MUST BE CONTRACT QUALITY AND SUITABLE FOR HEAVY COMMERCIAL USE.
-MUST MEET OR EXCEED ALL REQUIREMENTS OF ASIG DESIGN’S FURNITURE GENERAL NOTES.

- 所有尺寸须与图纸及现在情况核实
- 制造商须与生产或安装前向客人提供图纸有样板以作最后批核
- 所有物料须符合或超于所有适用国家或当地之防火条例标准，包括中国大 陆
- 须符合合同品质及适合重商业用途
- 须符合或超于所有客户家具综述内之标准要求

ASIG DESIGN
杰 璐 设 计 工 作 室

NUMBER 灯具编号： F52

LIGHTING NAME 灯具名称： 艺术吊灯 PENDANT LIGHT

MANUFACTURER 供应商：
瑞瑟迪软装设计

CONTACT 联系人：
从前曼

EMAIL 电子邮件：

TELEPHONE 电话：
18302132218

MODEL 型号：
1010350

NAME 名称：

DESCRIPTION 形容：

TYPE 分类：

WEB 网址：

SPECIFICATION 描述
1. 原有基础上做调整
2. 两边的灯泡换成 3000K 可调角度射灯，中间两个为爱迪生黄光灯泡

MATERIAL 材料
金属 METAL

COLOR 颜色：
黑色 BLACK

SURFACE 表面：
哑光 MATTE

SIZE 尺寸：
L780*D300*H270

BULB 灯泡：
(2)LED 3000K 射灯，(2) 爱迪生黄光灯泡

PRICE 价格：

Manufacturer shall prepare shop drawings and/or prototype samples for checking and approval by JL prior to manufacture.
JL reserves the right to reject items that do not meet the specification requirements.
All specifications are the property of RS, and along with custom designs and prints, cannot be used without written permission. The same shall be returned at the completion of the work.
Do not scale drawings. All measurements must be checked at the site by the contractor or manufacturer.
Quantities listed are for reference only and are subject to change. Purchasing agent shall verify all quantities against plans prior to issuance of Purchase Orders.Any discrepancies shall be brought to the attention of JLprior to purchasing.Vendors to direct all queries through client’s purchasing agent. The images contained herein are not to be used for the engineering or manufacturing of the product depicted hereon. Manufacturer to be responsible for the engineering,functionality and durability of the final product. Neither these images nor the design intentreflected thereon shall be used in any manner which may result in an infringement of any copyrights, trademarks, patents or other intellectual property rights. Manufacturer shall be solely responsible for compliance with all applicable U.S. and other laws regarding copyrights,、trademarks, patents and intellectual property rights, and shall indemnify and hold JL and allof its related entities, harmless from any claims, damages or expenses resulting from any negligent or willful violation of the same. These images are for overall look and feel of the proposed design direction only, do not represent previous or future specifications,will not beimitated by RS, and are not to be used for the engineering or manufacturing of the product depicted hereon. Neither these images nor the design direction reflected thereon shall be used in any manner which may result in an infringement of any copyrights, trademarks,patents or other intellectual property rights. Please refer to the Table of Contents for specification issue.

制造商应当准备施工图和 / 或原型样品生产前检查和批准 LJ。
LJ 有权否决项不符合规范要求 . 所有的规格是的财产 , 以及定制的设计和打印 , 不能没有书面许可使用。同样应当退还的完成工作。
没有图纸。必须检查所有测量在现场由承包商或制造商。列出数量仅供参考 , 如有更改 , 恕。
采购员应核实数量计划发行采购订单之前。供应商直接所有查询通过客户的采购代理。
本文所包含的图像不用于工程或制造产品的描述在此。制造商负责工程 , 功能和最终产品的耐用性。这些图像和设计 intentreflected 上应以任何方式使用 , 可能会导致任何的侵权行为版权、商标、专利或其他知识产权。制造商应当单独负责遵守所有适用的美国和其他涉及版权的法律 , 商标、专利和知识产权 , 并应赔偿并持有 , 所有其相关的实体 , 无害的任何索赔、损失或产生的任何费用疏忽或故意违反相同。这些图像的整体外观和感觉提出了设计方向 , 不代表之前或之后的规格 , 不会由 JL 模仿 , 不用于工程或产品的制造描述在此。这些图片和设计方向上应反映出来以任何方式使用 , 可能会导致侵犯任何版权、商标、专利或其他知识产权。请参阅表的内容规范的问题。

-ALL MEASUREMENTS TO BE VERIFIED AGAINST DRAWINGS AND CURRENT BUILDING CONDITIONS.
-MANUFACTURER TO PROVIDE SHOP DRAWINGS, DETAILS AND FINISH SAMPLES TO ASIG DESIGN FOR FINAL APPROVAL PRIOR TO PRODUCTION/INSTALLATION.
-ALL MATERIALS USED MUST MEET OR EXCEED ALL APPLICABLE FEDERAL, STATE AND LOCAL FLAME CODE REQUIREMENTS, INCLUDING CHINA
-MUST BE CONTRACT QUALITY AND SUITABLE FOR HEAVY COMMERCIAL USE.
-MUST MEET OR EXCEED ALL REQUIREMENTS OF ASIG DESIGN’S FURNITURE GENERAL NOTES.

- 所有尺寸须与图纸及现在情况核实
- 制造商须与生产或安装前向客人提供图纸有样板以作最后批核
- 所有物料须符合或超于所有适用国家或当地之防火条例标准，包括中国大 陆
- 须符合合同品质及适合重商业用途
- 须符合或超于所有客户家具综述内之标准要求

ASIG DESIGN
杰 璐 设 计 工 作 室

NUMBER 灯具编号： F54

LIGHTING NAME 灯具名称： 艺术吊灯 PENDANT LIGHT

MANUFACTURER 供应商：
瑞瑟迪软装设计

CONTACT 联系人：
从前曼

EMAIL 电子邮件：

TELEPHONE 电话：
18302132218

MODEL 型号：
1010300（定做）

NAME 名称：

DESCRIPTION 形容：

TYPE 分类：

WEB 网址：

SPECIFICATION 描述
详见图纸

MATERIAL 材料
水晶 CRYSTAL

COLOR 颜色：
透明 TRANSPARENT

SURFACE 表面：
亮面 GLOSSY

SIZE 尺寸：
L7000*D1100

BULB 灯泡：
LED

PRICE 价格：

Manufacturer shall prepare shop drawings and/or prototype samples for checking and approval by JL prior to manufacture.
JL reserves the right to reject items that do not meet the specification requirements.
All specifications are the property of RS, and along with custom designs and prints, cannot be used without written permission. The same shall be returned at the completion of the work.
Do not scale drawings. All measurements must be checked at the site by the contractor or manufacturer.
Quantities listed are for reference only and are subject to change. Purchasing agent shall verify all quantities against plans prior to issuance of Purchase Orders.Any discrepancies shall be brought to the attention of JLprior to purchasing.Vendors to direct all queries through client’s purchasing agent. The images contained herein are not to be used for the engineering or manufacturing of the product depicted hereon. Manufacturer to be responsible for the engineering,functionality and durability of the final product. Neither these images nor the design intentreflected thereon shall be used in any manner which may result in an infringement of any copyrights, trademarks, patents or other intellectual property rights. Manufacturer shall be solely responsible for compliance with all applicable U.S. and other laws regarding copyrights,、trademarks, patents and intellectual property rights, and shall indemnify and hold JL and allof its related entities, harmless from any claims, damages or expenses resulting from any negligent or willful violation of the same. These images are for overall look and feel of the proposed design direction only, do not represent previous or future specifications,will not beimitated by RS, and are not to be used for the engineering or manufacturing of the product depicted hereon. Neither these images nor the design direction reflected thereon shall be used in any manner which may result in an infringement of any copyrights, trademarks,patents or other intellectual property rights. Please refer to the Table of Contents for specification issue.

制造商应当准备施工图和 / 或原型样品生产前检查和批准 LJ。
LJ 有权否决项不符合规范要求 . 所有的规格是的财产 , 以及定制的设计和打印 , 不能没有书面许可使用。同样应当退还的完成工作。
没有图纸。必须检查所有测量在现场由承包商或制造商。列出数量仅供参考 , 如有更改 , 恕。采购员应核实数量计划发行采购订单之前。供应商直接所有查询通过客户的采购代理。
本文所包含的图像不用于工程或制造产品的描述在此。制造商负责工程 , 功能和最终产品的耐用性。这些图像和设计 intentreflected 上应以任何方式使用 , 可能会导致任何的侵权行为版权、商标、专利或其他知识产权。制造商应当单独负责遵守所有适用的美国和其他涉及版权的法律 , 商标、专利和知识产权 , 并应赔偿并持有 , 所有其相关的实体 , 无害的任何索赔、损失或产生的任何费用疏忽或故意违反相同。这些图像的整体外观和感觉提出了设计方向 , 不代表之前或之后的规格 , 不会由 JL 模仿 , 不用于工程或产品的制造描述在此。这些图片和设计方向上应反映出来以任何方式使用 , 可能会导致侵犯任何版权、商标、专利或其他知识产权。请参阅表的内容规范的问题。

-ALL MEASUREMENTS TO BE VERIFIED AGAINST DRAWINGS AND CURRENT BUILDING CONDITIONS.
-MANUFACTURER TO PROVIDE SHOP DRAWINGS, DETAILS AND FINISH SAMPLES TO ASIG DESIGN FOR FINAL APPROVAL PRIOR TO PRODUCTION/INSTALLATION.
-ALL MATERIALS USED MUST MEET OR EXCEED ALL APPLICABLE FEDERAL, STATE AND LOCAL FLAME CODE REQUIREMENTS, INCLUDING CHINA
-MUST BE CONTRACT QUALITY AND SUITABLE FOR HEAVY COMMERCIAL USE.
-MUST MEET OR EXCEED ALL REQUIREMENTS OF ASIG DESIGN’S FURNITURE GENERAL NOTES.

- 所有尺寸须与图纸及现在情况核实
- 制造商须与生产或安装前向客人提供图纸有样板以作最后批核
- 所有物料须符合或超于所有适用国家或当地之防火条例标准，包括中国大 陆
- 须符合合同品质及适合重商业用途
- 须符合或超于所有客户家具综述内之标准要求

ASIG DESIGN
杰 璐 设 计 工 作 室

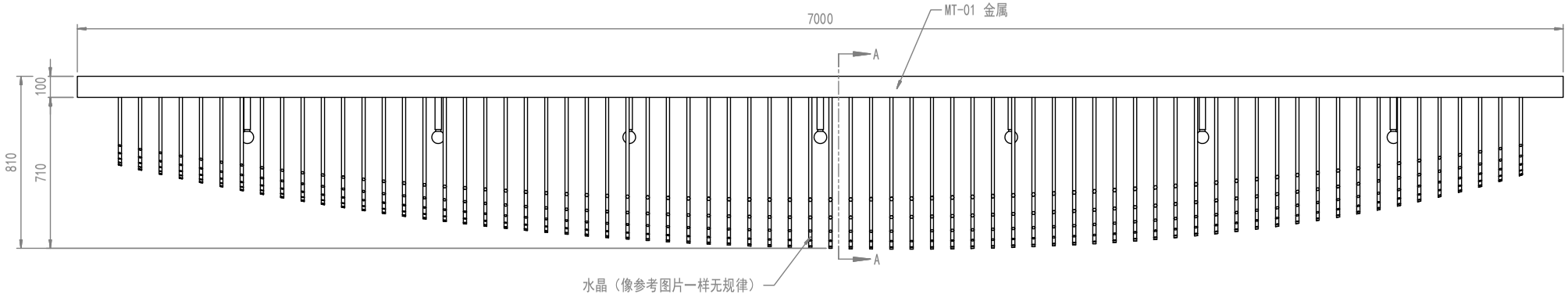

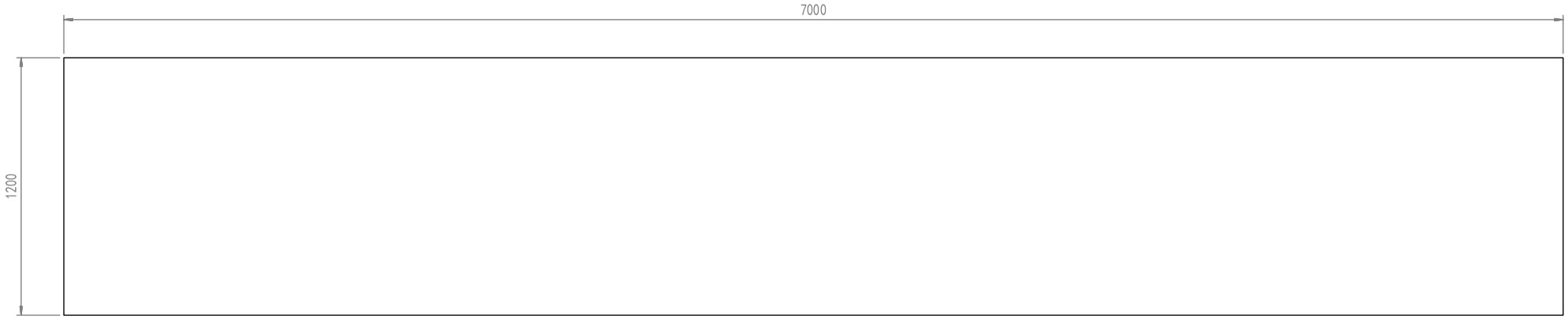

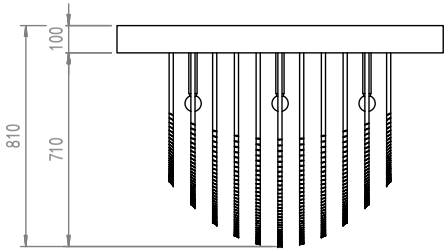

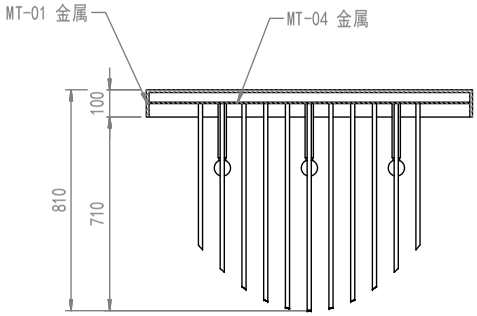

剖面 A-A
比例 1 : 20

参考图片

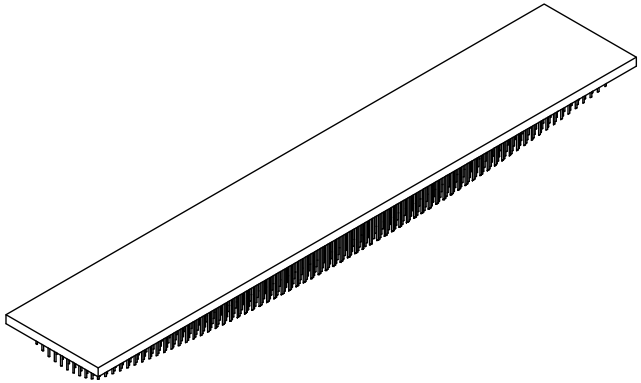

杰瑞设计工作室
上海市徐汇区枫林路85号7号楼101室
485 FENGLIN RD, BLDG 7, RM 101, SHANGHAI 200032, CHINA

这些平面图，方案和规格是ASIG DESIGN（杰瑞设计工作室）独家设计并拥有专有权。任何未经ASIG DESIGN（杰瑞设计工作室）事先书面同意的复制，修改，泄露和使用这些图纸，或者以任何方式使用这些材料，以及使用其中任何部分的行为都是被严格禁止的。承建商应该严格查核所有的尺寸和数据，如果存在任何差异应该参照设计图纸执行施工，全部TBC（有待确认）的尺寸都应该由承建商仔细检查确认，所有的EX（ 替换实际）的尺寸应该在施工过程中严格按照符合现场的实际尺寸施工。

THESE PLANS AND SPECIFICATIONS ARE THE EXCLUSIVE PROPERTY OF ASIG DESIGN. ANY REPRODUCTION, MODIFICATION, DISCLOSURE AND OR USE OF THESE MATERIALS OR ANY PORTION OF THEM WITHOUT PRIOR WRITTEN CONSENT FROM ASIG DESIGN IS STRICTLY PROHIBITED. FIGURED DIMENSIONS SHOULD BE CHECKED BY THE CONTRACTORS, AND ANY DISCREPANCIES SHOULD BE REFERRED TO THE DRAWING. ALL "TBC" DIMENSIONS ARE TO BE CONFIRMED BY THE CONTRACTOR. ALL "EX" DIMENSIONS ARE TO MATCH EXISTING.

调整日期 REV. DATE	
日期 DATE	01/21/2020
项目编号 PROJECT NO.	i190404
项目名称 PROJECT NAME	PULLMAN GUANGZHOU
书页名称 PAGE NAME	包房艺术吊灯 PENDANT LIGHT
书页号码 PAGE NO.	F54

NUMBER 灯具编号： F55

LIGHTING NAME 灯具名称： 艺术落地灯 PENDANT LIGHT

MANUFACTURER 供应商：
瑞瑟迪软装设计

CONTACT 联系人：
从前曼

EMAIL 电子邮件：

TELEPHONE 电话：
18302132218

MODEL 型号：
1019550（定制）

NAME 名称：

DESCRIPTION 形容：

TYPE 分类：

WEB 网址：

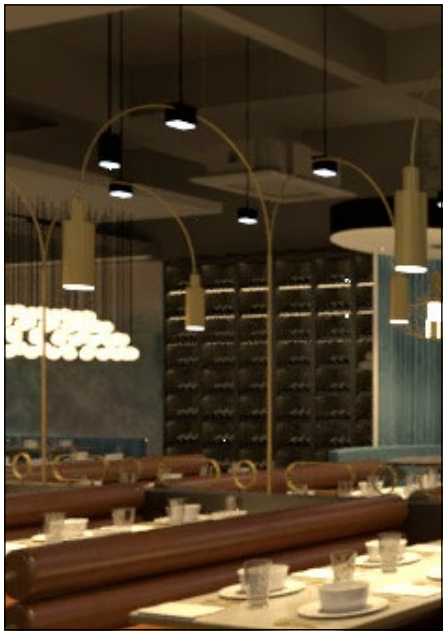

SPECIFICATION 描述
1. 定做金色钓鱼灯杆
2. 使用成品灯头

MATERIAL 材料
金属 METAL

COLOR 颜色：
金色 GOLD

SURFACE 表面：
拉丝 BRUSHED

SIZE 尺寸：
D120*H190

BULB 灯泡：
LED 3000K 射灯

PRICE 价格：

Manufacturer shall prepare shop drawings and/or prototype samples for checking and approval by JL prior to manufacture.
JL reserves the right to reject items that do not meet the specification requirements.
All specifications are the property of RS, and along with custom designs and prints, cannot be used without written permission. The same shall be returned at the completion of the work.
Do not scale drawings. All measurements must be checked at the site by the contractor or manufacturer.
Quantities listed are for reference only and are subject to change. Purchasing agent shall verify all quantities against plans prior to issuance of Purchase Orders.Any discrepancies shall be brought to the attention of JLprior to purchasing.Vendors to direct all queries through client’s purchasing agent. The images contained herein are not to be used for the engineering or manufacturing of the product depicted hereon. Manufacturer to be responsible for the engineering,functionality and durability of the final product. Neither these images nor the design intentreflected thereon shall be used in any manner which may result in an infringement of any copyrights, trademarks, patents or other intellectual property rights. Manufacturer shall be solely responsible for compliance with all applicable U.S. and other laws regarding copyrights,、trademarks, patents and intellectual property rights, and shall indemnify and hold JL and allof its related entities, harmless from any claims, damages or expenses resulting from any negligent or willful violation of the same. These images are for overall look and feel of the proposed design direction only, do not represent previous or future specifications,will not beimitated by RS, and are not to be used for the engineering or manufacturing of the product depicted hereon. Neither these images nor the design direction reflected thereon shall be used in any manner which may result in an infringement of any copyrights, trademarks,patents or other intellectual property rights. Please refer to the Table of Contents for specification issue.

制造商应当准备施工图和 / 或原型样品生产前检查和批准 LJ。
LJ 有权否决项不符合规范要求 . 所有的规格是的财产 , 以及定制的设计和打印 , 不能没有书面许可使用。同样应当退还的完成工作。
没有图纸。必须检查所有测量在现场由承包商或制造商。列出数量仅供参考 , 如有更改 , 恕。采购员应核实数量计划发行采购订单之前。供应商直接所有查询通过客户的采购代理。
本文所包含的图像不用于工程或制造产品的描述在此。制造商负责工程 , 功能和最终产品的耐用性。这些图像和设计 intentreflected 上应以任何方式使用 , 可能会导致任何的侵权行为版权、商标、专利或其他知识产权。制造商应当单独负责遵守所有适用的美国和其他涉及版权的法律 , 商标、专利和知识产权 , 并应赔偿并持有 , 所有其相关的实体 , 无害的任何索赔、损失或产生的任何费用疏忽或故意违反相同。这些图像的整体外观和感觉提出了设计方向 , 不代表之前或之后的规格 , 不会由 JL 模仿 , 不用于工程或产品的制造描述在此。这些图片和设计方向上应反映出来以任何方式使用 , 可能会导致侵犯任何版权、商标、专利或其他知识产权。请参阅表的内容规范的问题。

-ALL MEASUREMENTS TO BE VERIFIED AGAINST DRAWINGS AND CURRENT BUILDING CONDITIONS.
-MANUFACTURER TO PROVIDE SHOP DRAWINGS, DETAILS AND FINISH SAMPLES TO ASIG DESIGN FOR FINAL APPROVAL PRIOR TO PRODUCTION/INSTALLATION.
-ALL MATERIALS USED MUST MEET OR EXCEED ALL APPLICABLE FEDERAL, STATE AND LOCAL FLAME CODE REQUIREMENTS, INCLUDING CHINA
-MUST BE CONTRACT QUALITY AND SUITABLE FOR HEAVY COMMERCIAL USE.
-MUST MEET OR EXCEED ALL REQUIREMENTS OF ASIG DESIGN’S FURNITURE GENERAL NOTES.

- 所有尺寸须与图纸及现在情况核实
- 制造商须与生产或安装前向客人提供图纸有样板以作最后批核
- 所有物料须符合或超于所有适用国家或当地之防火条例标准，包括中国大 陆
- 须符合合同品质及适合重商业用途
- 须符合或超于所有客户家具综述内之标准要求

ASIG DESIGN
杰 璐 设 计 工 作 室

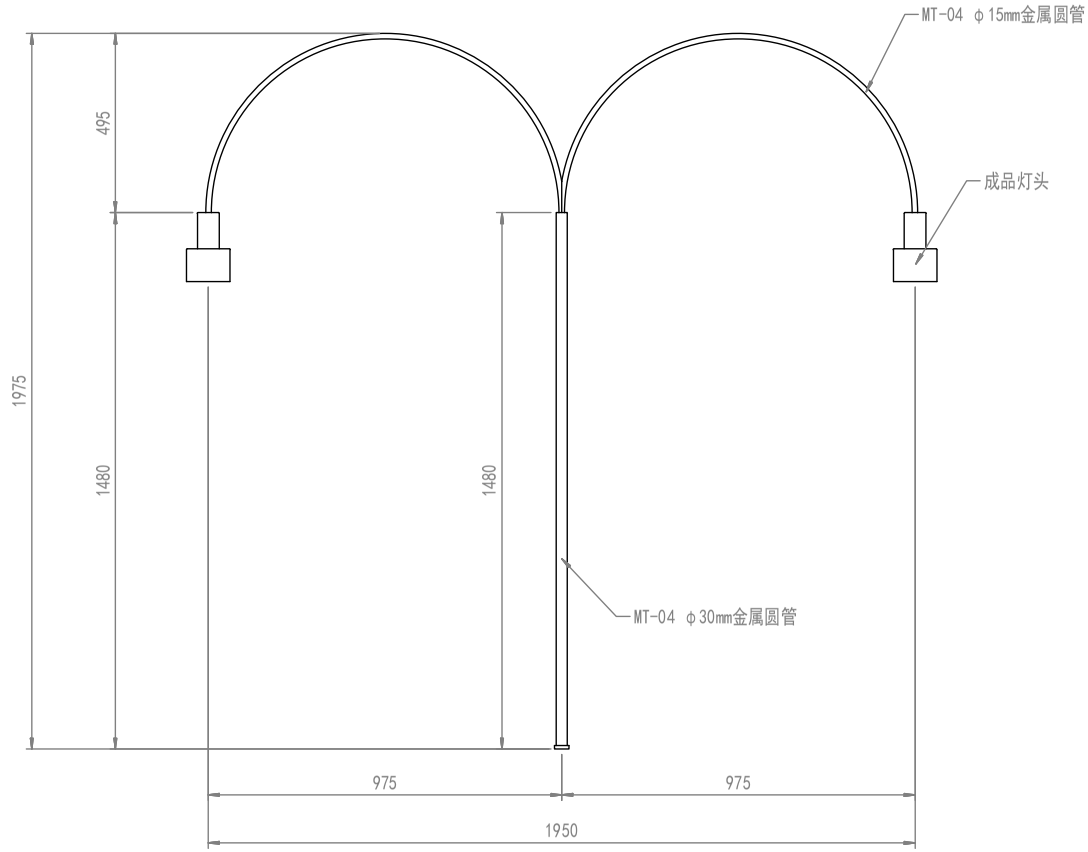

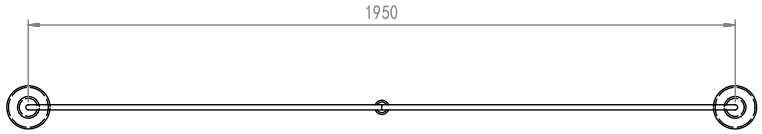

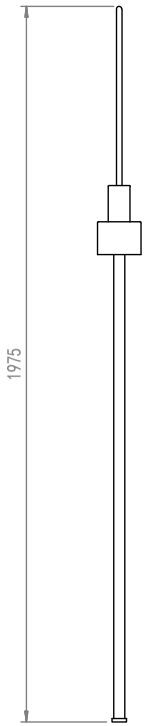

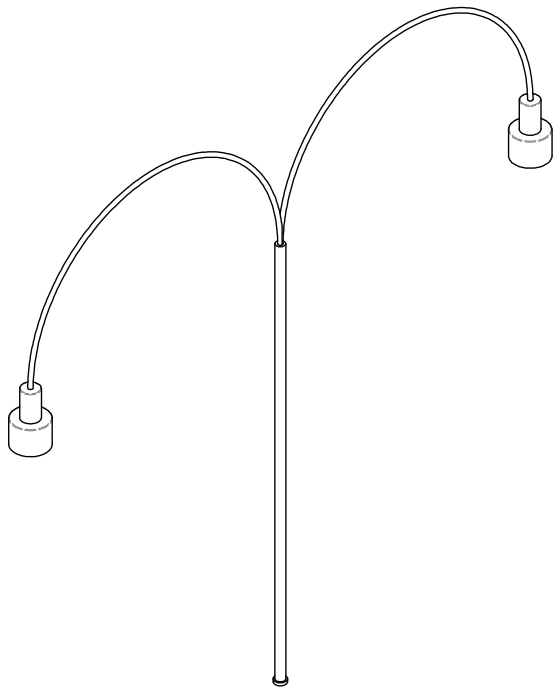

杰 璐 设 计 工 作 室
上海市徐汇区枫林路485号7号楼101室
485 FENGLIN RD, BLDG 7, RM 101, SHANGHAI 200032, CHINA

这些平面图，方案和规格是ASIG DESIGN（杰璐设计工作室）独家设计并具有专有权。任何未经ASIG DESIGN（杰璐设计工作室）事先书面同意的复制，修改，泄露和使用这些图纸，或者以任何方式使用这些材料，以及使用其中任何部分的行为都是被严格禁止的。承建商应该严格查核所有的尺寸和数据，如果存在任何差异应该参照设计图纸执行施工，全部TBC（有待确认）的尺寸都应该由承建商仔细检查确认，所有的EX（ 首缺实际）的尺寸应该在施工过程中严格按照符合现场的实际尺寸施工。

THESE PLANS AND SPECIFICATIONS ARE THE EXCLUSIVE PROPERTY OF ASIG DESIGN. ANY REPRODUCTION, MODIFICATION, DISCLOSURE AND OR USE OF THESE MATERIALS OR ANY PORTION OF THEM WITHOUT PRIOR WRITTEN CONSENT FROM ASIG DESIGN IS STRICTLY PROHIBITED. FIGURED DIMENSIONS SHOULD BE CHECKED BY THE CONTRACTORS, AND ANY DISCREPANCIES SHOULD BE REFERRED TO THE DRAWING. ALL "TBC" DIMENSIONS ARE TO BE CONFIRMED BY THE CONTRACTOR. ALL "EX" DIMENSIONS ARE TO MATCH EXISTING.

调整日期 REV. DATE	
日期 DATE	01/21/2020
项目编号 PROJECT NO.	i190404
项目名称 PROJECT NAME	PULLMAN GUANGZHOU
书页名称 PAGE NAME	艺术落地灯 PENDANT LIGHT
书页号码 PAGE NO.	F55

NUMBER 灯具编号： F56

LIGHTING NAME 灯具名称： 艺术吊灯 PENDANT LIGHT

MANUFACTURER 供应商：
瑞瑟迪软装设计

CONTACT 联系人：
从前曼

EMAIL 电子邮件：

TELEPHONE 电话：
18302132218

MODEL 型号：
1010310（定做）

NAME 名称：

DESCRIPTION 形容：

TYPE 分类：

WEB 网址：

SPECIFICATION 描述
详见图纸

MATERIAL 材料
水晶 CRYSTAL

COLOR 颜色：
透明 TRANSPARENT

SURFACE 表面：
亮面 GLOSSY

SIZE 尺寸：
直径 1800mm

BULB 灯泡：
LED

PRICE 价格：

Manufacturer shall prepare shop drawings and/or prototype samples for checking and approval by JL prior to manufacture.
JL reserves the right to reject items that do not meet the specification requirements.
All specifications are the property of RS, and along with custom designs and prints, cannot be used without written permission. The same shall be returned at the completion of the work.
Do not scale drawings. All measurements must be checked at the site by the contractor or manufacturer.
Quantities listed are for reference only and are subject to change. Purchasing agent shall verify all quantities against plans prior to issuance of Purchase Orders.Any discrepancies shall be brought to the attention of JLprior to purchasing.Vendors to direct all queries through client’s purchasing agent. The images contained herein are not to be used for the engineering or manufacturing of the product depicted hereon. Manufacturer to be responsible for the engineering,functionality and durability of the final product. Neither these images nor the design intentreflected thereon shall be used in any manner which may result in an infringement of any copyrights, trademarks, patents or other intellectual property rights. Manufacturer shall be solely responsible for compliance with all applicable U.S. and other laws regarding copyrights,、trademarks, patents and intellectual property rights, and shall indemnify and hold JL and allof its related entities, harmless from any claims, damages or expenses resulting from any negligent or willful violation of the same. These images are for overall look and feel of the proposed design direction only, do not represent previous or future specifications,will not beimitated by RS, and are not to be used for the engineering or manufacturing of the product depicted hereon. Neither these images nor the design direction reflected thereon shall be used in any manner which may result in an infringement of any copyrights, trademarks,patents or other intellectual property rights. Please refer to the Table of Contents for specification issue.

制造商应当准备施工图和 / 或原型样品生产前检查和批准 LJ。
LJ 有权否决项不符合规范要求 . 所有的规格是的财产 , 以及定制的设计和打印 , 不能没有书面许可使用。同样应当退还的完成工作。
没有图纸。必须检查所有测量在现场由承包商或制造商。列出数量仅供参考 , 如有更改 , 恕。
采购员应核实数量计划发行采购订单之前。供应商直接所有查询通过客户的采购代理。
本文所包含的图像不用于工程或制造产品的描述在此。制造商负责工程 , 功能和最终产品的耐用性。这些图像和设计 intentreflected 上应以任何方式使用 , 可能会导致任何的侵权行为版权、商标、专利或其他知识产权。制造商应当单独负责遵守所有适用的美国和其他涉及版权的法律 , 商标、专利和知识产权 , 并应赔偿并持有 , 所有其相关的实体 , 无害的任何索赔、损失或产生的任何费用疏忽或故意违反相同。这些图像的整体外观和感觉提出了设计方向 , 不代表之前或之后的规格 , 不会由 JL 模仿 , 不用于工程或产品的制造描述在此。
这些图片和设计方向上应反映出来以任何方式使用 , 可能会导致侵犯任何版权、商标、专利或其他知识产权。请参阅表的内容规范的问题。

-ALL MEASUREMENTS TO BE VERIFIED AGAINST DRAWINGS AND CURRENT BUILDING CONDITIONS.
-MANUFACTURER TO PROVIDE SHOP DRAWINGS, DETAILS AND FINISH SAMPLES TO ASIG DESIGN FOR FINAL APPROVAL PRIOR TO PRODUCTION/INSTALLATION.
-ALL MATERIALS USED MUST MEET OR EXCEED ALL APPLICABLE FEDERAL, STATE AND LOCAL FLAME CODE REQUIREMENTS, INCLUDING CHINA
-MUST BE CONTRACT QUALITY AND SUITABLE FOR HEAVY COMMERCIAL USE.
-MUST MEET OR EXCEED ALL REQUIREMENTS OF ASIG DESIGN’S FURNITURE GENERAL NOTES.

- 所有尺寸须与图纸及现在情况核实
- 制造商须与生产或安装前向客人提供图纸有样板以作最后批核
- 所有物料须符合或超于所有适用国家或当地之防火条例标准，包括中国大 陆
- 须符合合同品质及适合重商业用途
- 须符合或超于所有客户家具综述内之标准要求

ASIG DESIGN
杰 璐 设 计 工 作 室

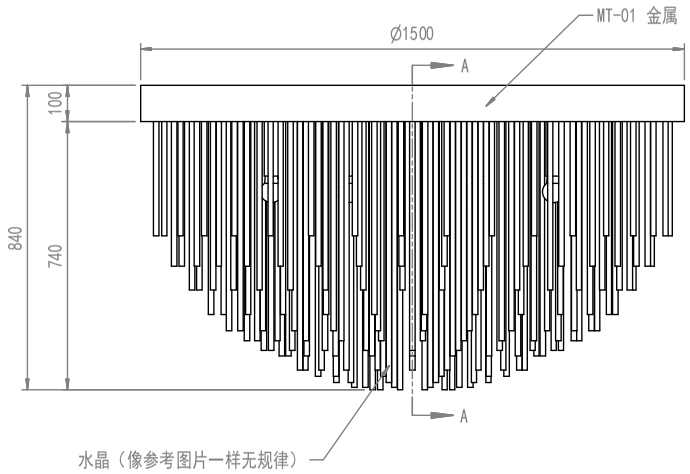

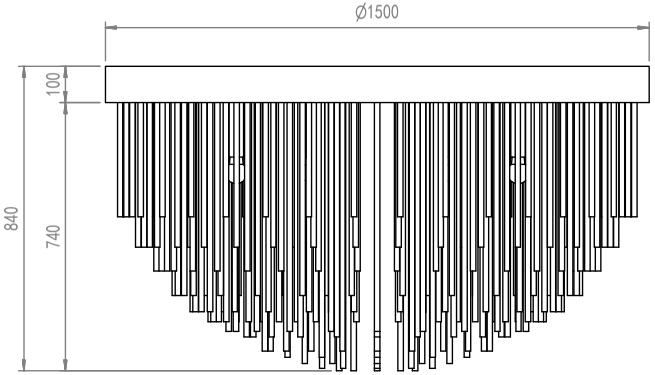

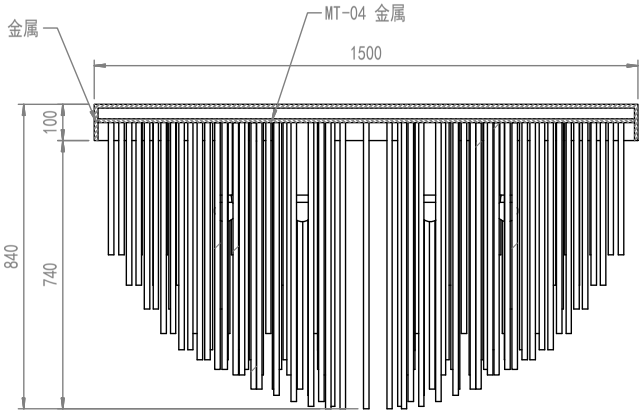

剖面 A-A
比例 1 : 15

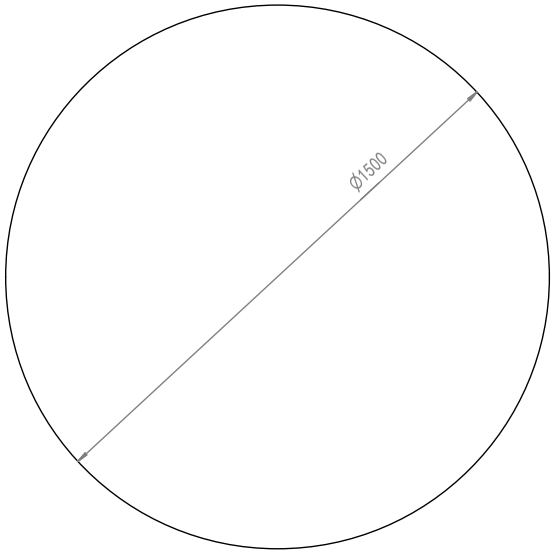

参考图片

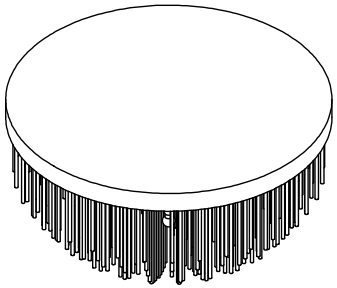

ASIG DESIGN
杰 璐 设 计 工 作 室
上海市徐汇区枫林路485号7号楼101室
485 FENGLIN RD, BLDG 7, RM 101, SHANGHAI 200032, CHINA

这些平面图，方案和规格是ASIG DESIGN（杰璐设计工作室）独家设计并拥有专有权。任何未经ASIG DESIGN（杰璐设计工作室）事先书面同意的复制，修改，泄露和使用这些图纸，或者以任何方式使用这些材料，以及使用其中任何部分的行为都是被严格禁止的。承建商应该严格查核所有的尺寸和数据，如果存在任何差异应该参照设计图纸执行施工，全部TBC（有待确认）的尺寸都应该由承建商仔细检查确认，所有的EX（ 替换实际）的尺寸应该在施工过程中严格按照符合现场的实际尺寸施工。

THESE PLANS AND SPECIFICATIONS ARE THE EXCLUSIVE PROPERTY OF ASIG DESIGN. ANY REPRODUCTION, MODIFICATION, DISCLOSURE AND OR USE OF THESE MATERIALS OR ANY PORTION OF THEM WITHOUT PRIOR WRITTEN CONSENT FROM ASIG DESIGN IS STRICTLY PROHIBITED. FIGURED DIMENSIONS SHOULD BE CHECKED BY THE CONTRACTORS, AND ANY DISCREPANCIES SHOULD BE REFERRED TO THE DRAWING. ALL "TBC" DIMENSIONS ARE TO BE CONFIRMED BY THE CONTRACTOR. ALL "EX" DIMENSIONS ARE TO MATCH EXISTING.

调整日期 REV. DATE	日期 DATE	01/21/2020	书页名称 PAGE NAME: 包房艺术吊灯 PENDANT LIGHT
	项目编号 PROJECT NO.	i190404	书页号码 PAGE NO.
	项目名称 PROJECT NAME	PULLMAN GUANGZHOU	F56

NUMBER 灯具编号： F57

LIGHTING NAME 灯具名称： 艺术吊灯 PENDANT LIGHT

MANUFACTURER 供应商：
瑞瑟迪软装设计

CONTACT 联系人：
从前曼

EMAIL 电子邮件：

TELEPHONE 电话：
18302132218

MODEL 型号：
1019509

NAME 名称：

DESCRIPTION 形容：

TYPE 分类：

WEB 网址：

SPECIFICATION 描述

MATERIAL 材料
水晶 CRYSTAL

COLOR 颜色：
透明 TRANSPARENT

SURFACE 表面：
亮面 GLOSSY

SIZE 尺寸：
直径 80mm

BULB 灯泡：
LED 1W 3000K

PRICE 价格：

Manufacturer shall prepare shop drawings and/or prototype samples for checking and approval by JL prior to manufacture.
JL reserves the right to reject items that do not meet the specification requirements.
All specifications are the property of RS, and along with custom designs and prints, cannot be used without written permission. The same shall be returned at the completion of the work.
Do not scale drawings. All measurements must be checked at the site by the contractor or manufacturer.
Quantities listed are for reference only and are subject to change. Purchasing agent shall verify all quantities against plans prior to issuance of Purchase Orders.Any discrepancies shall be brought to the attention of JLprior to purchasing.Vendors to direct all queries through client’s purchasing agent. The images contained herein are not to be used for the engineering or manufacturing of the product depicted hereon. Manufacturer to be responsible for the engineering,functionality and durability of the final product. Neither these images nor the design intentreflected thereon shall be used in any manner which may result in an infringement of any copyrights, trademarks, patents or other intellectual property rights. Manufacturer shall be solely responsible for compliance with all applicable U.S. and other laws regarding copyrights,、trademarks, patents and intellectual property rights, and shall indemnify and hold JL and allof its related entities, harmless from any claims, damages or expenses resulting from any negligent or willful violation of the same. These images are for overall look and feel of the proposed design direction only, do not represent previous or future specifications,will not beimitated by RS, and are not to be used for the engineering or manufacturing of the product depicted hereon. Neither these images nor the design direction reflected thereon shall be used in any manner which may result in an infringement of any copyrights, trademarks,patents or other intellectual property rights. Please refer to the Table of Contents for specification issue.

制造商应当准备施工图和 / 或原型样品生产前检查和批准 LJ。
LJ 有权否决项不符合规范要求 . 所有的规格是的财产 , 以及定制的设计和打印 , 不能没有书面许可使用。同样应当退还的完成工作。
没有图纸。必须检查所有测量在现场由承包商或制造商。列出数量仅供参考 , 如有更改 , 恕。
采购员应核实数量计划发行采购订单之前。供应商直接所有查询通过客户的采购代理。
本文所包含的图像不用于工程或制造产品的描述在此。制造商负责工程 , 功能和最终产品的耐用性。这些图像和设计 intentreflected 上应以任何方式使用 , 可能会导致任何的侵权行为版权、商标、专利或其他知识产权。制造商应当单独负责遵守所有适用的美国和其他涉及版权的法律 , 商标、专利和知识产权 , 并应赔偿并持有 , 所有其相关的实体 , 无害的任何索赔、损失或产生的任何费用疏忽或故意违反相同。这些图像的整体外观和感觉提出了设计方向 , 不代表之前或之后的规格 , 不会由 JL 模仿 , 不用于工程或产品的制造描述在此。
这些图片和设计方向上应反映出来以任何方式使用 , 可能会导致侵犯任何版权、商标、专利或其他知识产权。请参阅表的内容规范的问题。

-ALL MEASUREMENTS TO BE VERIFIED AGAINST DRAWINGS AND CURRENT BUILDING CONDITIONS.
-MANUFACTURER TO PROVIDE SHOP DRAWINGS, DETAILS AND FINISH SAMPLES TO ASIG DESIGN FOR FINAL APPROVAL PRIOR TO PRODUCTION/INSTALLATION.
-ALL MATERIALS USED MUST MEET OR EXCEED ALL APPLICABLE FEDERAL, STATE AND LOCAL FLAME CODE REQUIREMENTS, INCLUDING CHINA
-MUST BE CONTRACT QUALITY AND SUITABLE FOR HEAVY COMMERCIAL USE.
-MUST MEET OR EXCEED ALL REQUIREMENTS OF ASIG DESIGN’S FURNITURE GENERAL NOTES.

- 所有尺寸须与图纸及现在情况核实
- 制造商须与生产或安装前向客人提供图纸有样板以作最后批核
- 所有物料须符合或超于所有适用国家或当地之防火条例标准，包括中国大 陆
- 须符合合同品质及适合重商业用途
- 须符合或超于所有客户家具综述内之标准要求

ASIG DESIGN
杰 璐 设 计 工 作 室

NUMBER 灯具编号： F59

LIGHTING NAME 灯具名称： 落地灯 PENDANT LIGHT

MANUFACTURER 供应商：
瑞瑟迪软装设计

CONTACT 联系人：
从前曼

EMAIL 电子邮件：

TELEPHONE 电话：
18302132218

MODEL 型号：
1010102

NAME 名称：

DESCRIPTION 形容：

TYPE 分类：

WEB 网址：

SPECIFICATION 描述

MATERIAL 材料
金属 METAL

COLOR 颜色：
金色 GOLD

SURFACE 表面：
拉丝 BRUSHED

SIZE 尺寸：
D320*H1600

BULB 灯泡：
LED

PRICE 价格：

Manufacturer shall prepare shop drawings and/or prototype samples for checking and approval by JL prior to manufacture.
JL reserves the right to reject items that do not meet the specification requirements.
All specifications are the property of RS, and along with custom designs and prints, cannot be used without written permission. The same shall be returned at the completion of the work.
Do not scale drawings. All measurements must be checked at the site by the contractor or manufacturer.
Quantities listed are for reference only and are subject to change. Purchasing agent shall verify all quantities against plans prior to issuance of Purchase Orders.Any discrepancies shall be brought to the attention of JLprior to purchasing.Vendors to direct all queries through client’s purchasing agent. The images contained herein are not to be used for the engineering or manufacturing of the product depicted hereon. Manufacturer to be responsible for the engineering,functionality and durability of the final product. Neither these images nor the design intentreflected thereon shall be used in any manner which may result in an infringement of any copyrights, trademarks, patents or other intellectual property rights. Manufacturer shall be solely responsible for compliance with all applicable U.S. and other laws regarding copyrights,、trademarks, patents and intellectual property rights, and shall indemnify and hold JL and allof its related entities, harmless from any claims, damages or expenses resulting from any negligent or willful violation of the same. These images are for overall look and feel of the proposed design direction only, do not represent previous or future specifications,will not beimitated by RS, and are not to be used for the engineering or manufacturing of the product depicted hereon. Neither these images nor the design direction reflected thereon shall be used in any manner which may result in an infringement of any copyrights, trademarks,patents or other intellectual property rights. Please refer to the Table of Contents for specification issue.

制造商应当准备施工图和 / 或原型样品生产前检查和批准 LJ。
LJ 有权否决项不符合规范要求 . 所有的规格是的财产 , 以及定制的设计和打印 , 不能没有书面许可使用。同样应当退还的完成工作。
没有图纸。必须检查所有测量在现场由承包商或制造商。列出数量仅供参考 , 如有更改 , 恕。
采购员应核实数量计划发行采购订单之前。供应商直接所有查询通过客户的采购代理。
本文所包含的图像不用于工程或制造产品的描述在此。制造商负责工程 , 功能和最终产品的耐用性。这些图像和设计 intentreflected 上应以任何方式使用 , 可能会导致任何的侵权行为版权、商标、专利或其他知识产权。制造商应当单独负责遵守所有适用的美国和其他涉及版权的法律 , 商标、专利和知识产权 , 并应赔偿并持有 , 所有其相关的实体 , 无害的任何索赔、损失或产生的任何费用疏忽或故意违反相同。这些图像的整体外观和感觉提出了设计方向 , 不代表之前或之后的规格 , 不会由 JL 模仿 , 不用于工程或产品的制造描述在此。
这些图片和设计方向上应反映出来以任何方式使用 , 可能会导致侵犯任何版权、商标、专利或其他知识产权。请参阅表的内容规范的问题。

-ALL MEASUREMENTS TO BE VERIFIED AGAINST DRAWINGS AND CURRENT BUILDING CONDITIONS.
-MANUFACTURER TO PROVIDE SHOP DRAWINGS, DETAILS AND FINISH SAMPLES TO ASIG DESIGN FOR FINAL APPROVAL PRIOR TO PRODUCTION/INSTALLATION.
-ALL MATERIALS USED MUST MEET OR EXCEED ALL APPLICABLE FEDERAL, STATE AND LOCAL FLAME CODE REQUIREMENTS, INCLUDING CHINA
-MUST BE CONTRACT QUALITY AND SUITABLE FOR HEAVY COMMERCIAL USE.
-MUST MEET OR EXCEED ALL REQUIREMENTS OF ASIG DESIGN’S FURNITURE GENERAL NOTES.

- 所有尺寸须与图纸及现在情况核实
- 制造商须与生产或安装前向客人提供图纸有样板以作最后批核
- 所有物料须符合或超于所有适用国家或当地之防火条例标准，包括中国大 陆
- 须符合合同品质及适合重商业用途
- 须符合或超于所有客户家具综述内之标准要求

ASIG DESIGN
杰 璐 设 计 工 作 室

NUMBER 灯具编号： F60

LIGHTING NAME 灯具名称： 艺术吊灯 PENDANT LIGHT

MANUFACTURER 供应商：
瑞瑟迪软装设计

CONTACT 联系人：
从前曼

EMAIL 电子邮件：

TELEPHONE 电话：
18302132218

MODEL 型号：
1019550

NAME 名称：

DESCRIPTION 形容：

TYPE 分类：

WEB 网址：

SPECIFICATION 描述

MATERIAL 材料
金属 METAL

COLOR 颜色：
金色 GOLD

SURFACE 表面：
拉丝 BRUSHED

SIZE 尺寸：
D120*H190

BULB 灯泡：
LED 3000K 射灯

PRICE 价格：

Manufacturer shall prepare shop drawings and/or prototype samples for checking and approval by JL prior to manufacture.
JL reserves the right to reject items that do not meet the specification requirements.
All specifications are the property of RS, and along with custom designs and prints, cannot be used without written permission. The same shall be returned at the completion of the work.
Do not scale drawings. All measurements must be checked at the site by the contractor or manufacturer.
Quantities listed are for reference only and are subject to change. Purchasing agent shall verify all quantities against plans prior to issuance of Purchase Orders.Any discrepancies shall be brought to the attention of JLprior to purchasing.Vendors to direct all queries through client’s purchasing agent. The images contained herein are not to be used for the engineering or manufacturing of the product depicted hereon. Manufacturer to be responsible for the engineering,functionality and durability of the final product. Neither these images nor the design intentreflected thereon shall be used in any manner which may result in an infringement of any copyrights, trademarks, patents or other intellectual property rights. Manufacturer shall be solely responsible for compliance with all applicable U.S. and other laws regarding copyrights,、trademarks, patents and intellectual property rights, and shall indemnify and hold JL and allof its related entities, harmless from any claims, damages or expenses resulting from any negligent or willful violation of the same. These images are for overall look and feel of the proposed design direction only, do not represent previous or future specifications,will not beimitated by RS, and are not to be used for the engineering or manufacturing of the product depicted hereon. Neither these images nor the design direction reflected thereon shall be used in any manner which may result in an infringement of any copyrights, trademarks,patents or other intellectual property rights. Please refer to the Table of Contents for specification issue.

制造商应当准备施工图和 / 或原型样品生产前检查和批准 LJ。
LJ 有权否决项不符合规范要求 . 所有的规格是的财产 , 以及定制的设计和打印 , 不能没有书面许可使用。同样应当退还的完成工作。
没有图纸。必须检查所有测量在现场由承包商或制造商。列出数量仅供参考 , 如有更改 , 恕。采购员应核实数量计划发行采购订单之前。供应商直接所有查询通过客户的采购代理。
本文所包含的图像不用于工程或制造产品的描述在此。制造商负责工程 , 功能和最终产品的耐用性。这些图像和设计 intentreflected 上应以任何方式使用 , 可能会导致任何的侵权行为版权、商标、专利或其他知识产权。制造商应当单独负责遵守所有适用的美国和其他涉及版权的法律 , 商标、专利和知识产权 , 并应赔偿并持有 , 所有其相关的实体 , 无害的任何索赔、损失或产生的任何费用疏忽或故意违反相同。这些图像的整体外观和感觉提出了设计方向 , 不代表之前或之后的规格 , 不会由 JL 模仿 , 不用于工程或产品的制造描述在此。这些图片和设计方向上应反映出来以任何方式使用 , 可能会导致侵犯任何版权、商标、专利或其他知识产权。请参阅表的内容规范的问题。

-ALL MEASUREMENTS TO BE VERIFIED AGAINST DRAWINGS AND CURRENT BUILDING CONDITIONS.
-MANUFACTURER TO PROVIDE SHOP DRAWINGS, DETAILS AND FINISH SAMPLES TO ASIG DESIGN FOR FINAL APPROVAL PRIOR TO PRODUCTION/INSTALLATION.
-ALL MATERIALS USED MUST MEET OR EXCEED ALL APPLICABLE FEDERAL, STATE AND LOCAL FLAME CODE REQUIREMENTS, INCLUDING CHINA
-MUST BE CONTRACT QUALITY AND SUITABLE FOR HEAVY COMMERCIAL USE.
-MUST MEET OR EXCEED ALL REQUIREMENTS OF ASIG DESIGN’S FURNITURE GENERAL NOTES.

- 所有尺寸须与图纸及现在情况核实
- 制造商须与生产或安装前向客人提供图纸有样板以作最后批核
- 所有物料须符合或超于所有适用国家或当地之防火条例标准，包括中国大 陆
- 须符合合同品质及适合重商业用途
- 须符合或超于所有客户家具综述内之标准要求

ASIG DESIGN
杰 璐 设 计 工 作 室

NUMBER 灯具编号： F61

LIGHTING NAME 灯具名称： 壁灯 WALL LIGHT

MANUFACTURER 供应商：
瑞瑟迪软装设计

CONTACT 联系人：
从前曼

EMAIL 电子邮件：

TELEPHONE 电话：
18302132218

MODEL 型号：
1010128

NAME 名称：

DESCRIPTION 形容：

TYPE 分类：

WEB 网址：

SPECIFICATION 描述

MATERIAL 材料
金属 METAL

COLOR 颜色：
黑色 BLACK

SURFACE 表面：
哑光 MATTE

SIZE 尺寸：
L140*W120*H610mm

BULB 灯泡：
LED

PRICE 价格：

Manufacturer shall prepare shop drawings and/or prototype samples for checking and approval by JL prior to manufacture.
JL reserves the right to reject items that do not meet the specification requirements.
All specifications are the property of RS, and along with custom designs and prints, cannot be used without written permission. The same shall be returned at the completion of the work.
Do not scale drawings. All measurements must be checked at the site by the contractor or manufacturer.
Quantities listed are for reference only and are subject to change. Purchasing agent shall verify all quantities against plans prior to issuance of Purchase Orders.Any discrepancies shall be brought to the attention of JLprior to purchasing.Vendors to direct all queries through client’s purchasing agent. The images contained herein are not to be used for the engineering or manufacturing of the product depicted hereon. Manufacturer to be responsible for the engineering,functionality and durability of the final product. Neither these images nor the design intentreflected thereon shall be used in any manner which may result in an infringement of any copyrights, trademarks, patents or other intellectual property rights. Manufacturer shall be solely responsible for compliance with all applicable U.S. and other laws regarding copyrights,、trademarks, patents and intellectual property rights, and shall indemnify and hold JL and allof its related entities, harmless from any claims, damages or expenses resulting from any negligent or willful violation of the same. These images are for overall look and feel of the proposed design direction only, do not represent previous or future specifications,will not beimitated by RS, and are not to be used for the engineering or manufacturing of the product depicted hereon. Neither these images nor the design direction reflected thereon shall be used in any manner which may result in an infringement of any copyrights, trademarks,patents or other intellectual property rights. Please refer to the Table of Contents for specification issue.

制造商应当准备施工图和 / 或原型样品生产前检查和批准 LJ。
LJ 有权否决项不符合规范要求 . 所有的规格是的财产 , 以及定制的设计和打印 , 不能没有书面许可使用。同样应当退还的完成工作。
没有图纸。必须检查所有测量在现场由承包商或制造商。列出数量仅供参考 , 如有更改 , 恕。
采购员应核实数量计划发行采购订单之前。供应商直接所有查询通过客户的采购代理。
本文所包含的图像不用于工程或制造产品的描述在此。制造商负责工程 , 功能和最终产品的耐用性。这些图像和设计 intentreflected 上应以任何方式使用 , 可能会导致任何的侵权行为版权、商标、专利或其他知识产权。制造商应当单独负责遵守所有适用的美国和其他涉及版权的法律 , 商标、专利和知识产权 , 并应赔偿并持有 , 所有其相关的实体 , 无害的任何索赔、损失或产生的任何费用疏忽或故意违反相同。这些图像的整体外观和感觉提出了设计方向 , 不代表之前或之后的规格 , 不会由 JL 模仿 , 不用于工程或产品的制造描述在此。
这些图片和设计方向上应反映出来以任何方式使用 , 可能会导致侵犯任何版权、商标、专利或其他知识产权。请参阅表的内容规范的问题。

-ALL MEASUREMENTS TO BE VERIFIED AGAINST DRAWINGS AND CURRENT BUILDING CONDITIONS.
-MANUFACTURER TO PROVIDE SHOP DRAWINGS, DETAILS AND FINISH SAMPLES TO ASIG DESIGN FOR FINAL APPROVAL PRIOR TO PRODUCTION/INSTALLATION.
-ALL MATERIALS USED MUST MEET OR EXCEED ALL APPLICABLE FEDERAL, STATE AND LOCAL FLAME CODE REQUIREMENTS, INCLUDING CHINA
-MUST BE CONTRACT QUALITY AND SUITABLE FOR HEAVY COMMERCIAL USE.
-MUST MEET OR EXCEED ALL REQUIREMENTS OF ASIG DESIGN’S FURNITURE GENERAL NOTES.

- 所有尺寸须与图纸及现在情况核实
- 制造商须与生产或安装前向客人提供图纸有样板以作最后批核
- 所有物料须符合或超于所有适用国家或当地之防火条例标准，包括中国大 陆
- 须符合合同品质及适合重商业用途
- 须符合或超于所有客户家具综述内之标准要求

ASIG DESIGN
杰 璐 设 计 工 作 室

NUMBER 灯具编号： F62

LIGHTING NAME 灯具名称： 艺术吊灯 PENDANT LIGHT

MANUFACTURER 供应商：
岚蔻灯饰

CONTACT 联系人：
郭先生

EMAIL 电子邮件：

TELEPHONE 电话：
13421403851

MODEL 型号：
大号

NAME 名称：

DESCRIPTION 形容：

TYPE 分类：

WEB 网址：

SPECIFICATION 描述
1. 原有基础上做调整
2. 灯罩底部安装射灯

MATERIAL 材料
金属 METAL

COLOR 颜色：
金色 GOLD

SURFACE 表面：
拉丝 BRUSHED

SIZE 尺寸：
W430*H380mm

BULB 灯泡：
LED

PRICE 价格：

Manufacturer shall prepare shop drawings and/or prototype samples for checking and approval by JL prior to manufacture.
JL reserves the right to reject items that do not meet the specification requirements.
All specifications are the property of RS, and along with custom designs and prints, cannot be used without written permission. The same shall be returned at the completion of the work.
Do not scale drawings. All measurements must be checked at the site by the contractor or manufacturer.
Quantities listed are for reference only and are subject to change. Purchasing agent shall verify all quantities against plans prior to issuance of Purchase Orders.Any discrepancies shall be brought to the attention of JLprior to purchasing.Vendors to direct all queries through client’s purchasing agent. The images contained herein are not to be used for the engineering or manufacturing of the product depicted hereon. Manufacturer to be responsible for the engineering,functionality and durability of the final product. Neither these images nor the design intentreflected thereon shall be used in any manner which may result in an infringement of any copyrights, trademarks, patents or other intellectual property rights. Manufacturer shall be solely responsible for compliance with all applicable U.S. and other laws regarding copyrights,、trademarks, patents and intellectual property rights, and shall indemnify and hold JL and allof its related entities, harmless from any claims, damages or expenses resulting from any negligent or willful violation of the same. These images are for overall look and feel of the proposed design direction only, do not represent previous or future specifications,will not beimitated by RS, and are not to be used for the engineering or manufacturing of the product depicted hereon. Neither these images nor the design direction reflected thereon shall be used in any manner which may result in an infringement of any copyrights, trademarks,patents or other intellectual property rights. Please refer to the Table of Contents for specification issue.

制造商应当准备施工图和 / 或原型样品生产前检查和批准 LJ。
LJ 有权否决项不符合规范要求 . 所有的规格是的财产 , 以及定制的设计和打印 , 不能没有书面许可使用。同样应当退还的完成工作。
没有图纸。必须检查所有测量在现场由承包商或制造商。列出数量仅供参考 , 如有更改 , 恕。
采购员应核实数量计划发行采购订单之前。供应商直接所有查询通过客户的采购代理。
本文所包含的图像不用于工程或制造产品的描述在此。制造商负责工程 , 功能和最终产品的耐用性。这些图像和设计 intentreflected 上应以任何方式使用 , 可能会导致任何的侵权行为版权、商标、专利或其他知识产权。制造商应当单独负责遵守所有适用的美国和其他涉及版权的法律 , 商标、专利和知识产权 , 并应赔偿并持有 , 所有其相关的实体 , 无害的任何索赔、损失或产生的任何费用疏忽或故意违反相同。这些图像的整体外观和感觉提出了设计方向 , 不代表之前或之后的规格 , 不会由 JL 模仿 , 不用于工程或产品的制造描述在此。
这些图片和设计方向上应反映出来以任何方式使用 , 可能会导致侵犯任何版权、商标、专利或其他知识产权。请参阅表的内容规范的问题。

-ALL MEASUREMENTS TO BE VERIFIED AGAINST DRAWINGS AND CURRENT BUILDING CONDITIONS.
-MANUFACTURER TO PROVIDE SHOP DRAWINGS, DETAILS AND FINISH SAMPLES TO ASIG DESIGN FOR FINAL APPROVAL PRIOR TO PRODUCTION/INSTALLATION.
-ALL MATERIALS USED MUST MEET OR EXCEED ALL APPLICABLE FEDERAL, STATE AND LOCAL FLAME CODE REQUIREMENTS, INCLUDING CHINA
-MUST BE CONTRACT QUALITY AND SUITABLE FOR HEAVY COMMERCIAL USE.
-MUST MEET OR EXCEED ALL REQUIREMENTS OF ASIG DESIGN’S FURNITURE GENERAL NOTES.

- 所有尺寸须与图纸及现在情况核实
- 制造商须与生产或安装前向客人提供图纸有样板以作最后批核
- 所有物料须符合或超于所有适用国家或当地之防火条例标准，包括中国大 陆
- 须符合合同品质及适合重商业用途
- 须符合或超于所有客户家具综述内之标准要求

ASIG DESIGN
杰 璐 设 计 工 作 室

NUMBER 灯具编号： F63

LIGHTING NAME 灯具名称： 艺术吊灯 PENDANT LIGHT

MANUFACTURER 供应商：
瑞瑟迪软装设计

CONTACT 联系人：
从前曼

EMAIL 电子邮件：

TELEPHONE 电话：
18302132218

MODEL 型号：
1019513

NAME 名称：

DESCRIPTION 形容：

TYPE 分类：

WEB 网址：

SPECIFICATION 描述

MATERIAL 材料
亚克力 ARYLIC

COLOR 颜色：
白色 WHITE

SURFACE 表面：
亮面 GLOSS

SIZE 尺寸：
直径 80mm

BULB 灯泡：
LED 1W 3000K

PRICE 价格：

Manufacturer shall prepare shop drawings and/or prototype samples for checking and approval by JL prior to manufacture.
JL reserves the right to reject items that do not meet the specification requirements.
All specifications are the property of RS, and along with custom designs and prints, cannot be used without written permission. The same shall be returned at the completion of the work.
Do not scale drawings. All measurements must be checked at the site by the contractor or manufacturer.
Quantities listed are for reference only and are subject to change. Purchasing agent shall verify all quantities against plans prior to issuance of Purchase Orders.Any discrepancies shall be brought to the attention of JLprior to purchasing.Vendors to direct all queries through client’s purchasing agent. The images contained herein are not to be used for the engineering or manufacturing of the product depicted hereon. Manufacturer to be responsible for the engineering,functionality and durability of the final product. Neither these images nor the design intentreflected thereon shall be used in any manner which may result in an infringement of any copyrights, trademarks, patents or other intellectual property rights. Manufacturer shall be solely responsible for compliance with all applicable U.S. and other laws regarding copyrights,、trademarks, patents and intellectual property rights, and shall indemnify and hold JL and allof its related entities, harmless from any claims, damages or expenses resulting from any negligent or willful violation of the same. These images are for overall look and feel of the proposed design direction only, do not represent previous or future specifications,will not beimitated by RS, and are not to be used for the engineering or manufacturing of the product depicted hereon. Neither these images nor the design direction reflected thereon shall be used in any manner which may result in an infringement of any copyrights, trademarks,patents or other intellectual property rights. Please refer to the Table of Contents for specification issue.

制造商应当准备施工图和 / 或原型样品生产前检查和批准 LJ。
LJ 有权否决项不符合规范要求 . 所有的规格是的财产 , 以及定制的设计和打印 , 不能没有书面许可使用。同样应当退还的完成工作。
没有图纸。必须检查所有测量在现场由承包商或制造商。列出数量仅供参考 , 如有更改 , 恕。采购员应核实数量计划发行采购订单之前。供应商直接所有查询通过客户的采购代理。
本文所包含的图像不用于工程或制造产品的描述在此。制造商负责工程 , 功能和最终产品的耐用性。这些图像和设计 intentreflected 上应以任何方式使用 , 可能会导致任何的侵权行为版权、商标、专利或其他知识产权。制造商应当单独负责遵守所有适用的美国和其他涉及版权的法律 , 商标、专利和知识产权 , 并应赔偿并持有 , 所有其相关的实体 , 无害的任何索赔、损失或产生的任何费用疏忽或故意违反相同。这些图像的整体外观和感觉提出了设计方向 , 不代表之前或之后的规格 , 不会由 JL 模仿 , 不用于工程或产品的制造描述在此。这些图片和设计方向上应反映出来以任何方式使用 , 可能会导致侵犯任何版权、商标、专利或其他知识产权。请参阅表的内容规范的问题。

-ALL MEASUREMENTS TO BE VERIFIED AGAINST DRAWINGS AND CURRENT BUILDING CONDITIONS.
-MANUFACTURER TO PROVIDE SHOP DRAWINGS, DETAILS AND FINISH SAMPLES TO ASIG DESIGN FOR FINAL APPROVAL PRIOR TO PRODUCTION/INSTALLATION.
-ALL MATERIALS USED MUST MEET OR EXCEED ALL APPLICABLE FEDERAL, STATE AND LOCAL FLAME CODE REQUIREMENTS, INCLUDING CHINA
-MUST BE CONTRACT QUALITY AND SUITABLE FOR HEAVY COMMERCIAL USE.
-MUST MEET OR EXCEED ALL REQUIREMENTS OF ASIG DESIGN’S FURNITURE GENERAL NOTES.

- 所有尺寸须与图纸及现在情况核实
- 制造商须与生产或安装前向客人提供图纸有样板以作最后批核
- 所有物料须符合或超于所有适用国家或当地之防火条例标准，包括中国大 陆
- 须符合合同品质及适合重商业用途
- 须符合或超于所有客户家具综述内之标准要求

ASIG DESIGN
杰 璐 设 计 工 作 室

NUMBER 灯具编号： F64

LIGHTING NAME 灯具名称： 艺术吊灯 PENDANT LIGHT

MANUFACTURER 供应商：
瑞瑟迪软装设计

CONTACT 联系人：
从前曼

EMAIL 电子邮件：

TELEPHONE 电话：
18302132218

MODEL 型号：
1010210（定做）

NAME 名称：

DESCRIPTION 形容：

TYPE 分类：

WEB 网址：

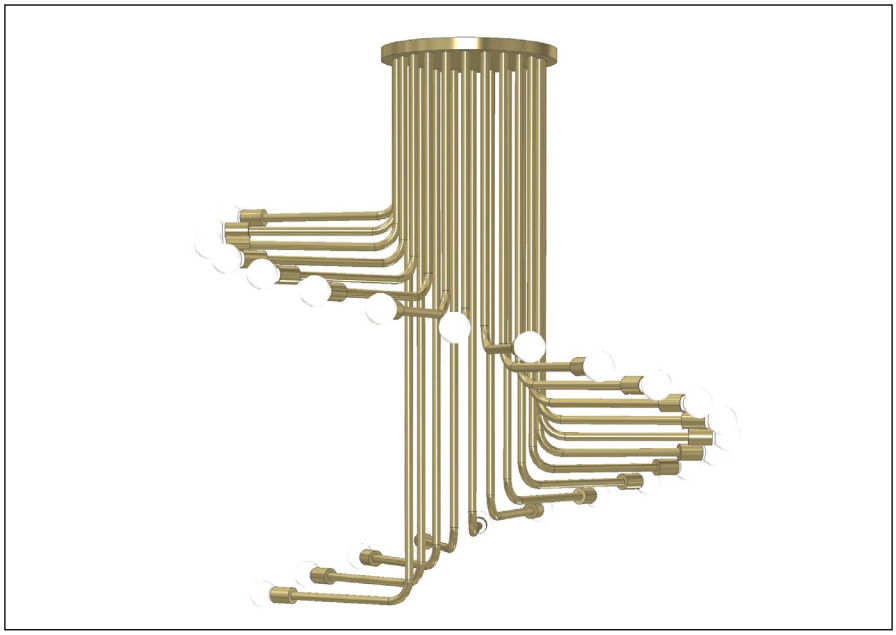

SPECIFICATION 描述
详见图纸

MATERIAL 材料
金属 METAL

COLOR 颜色：
金色 GOLD

SURFACE 表面：
拉丝 BRUSHED

SIZE 尺寸：

BULB 灯泡：
LED

PRICE 价格：

Manufacturer shall prepare shop drawings and/or prototype samples for checking and approval by JL prior to manufacture.
JL reserves the right to reject items that do not meet the specification requirements.
All specifications are the property of RS, and along with custom designs and prints, cannot be used without written permission. The same shall be returned at the completion of the work.
Do not scale drawings. All measurements must be checked at the site by the contractor or manufacturer.
Quantities listed are for reference only and are subject to change. Purchasing agent shall verify all quantities against plans prior to issuance of Purchase Orders.Any discrepancies shall be brought to the attention of JLprior to purchasing.Vendors to direct all queries through client’s purchasing agent. The images contained herein are not to be used for the engineering or manufacturing of the product depicted hereon. Manufacturer to be responsible for the engineering,functionality and durability of the final product. Neither these images nor the design intentreflected thereon shall be used in any manner which may result in an infringement of any copyrights, trademarks, patents or other intellectual property rights. Manufacturer shall be solely responsible for compliance with all applicable U.S. and other laws regarding copyrights,、trademarks, patents and intellectual property rights, and shall indemnify and hold JL and allof its related entities, harmless from any claims, damages or expenses resulting from any negligent or willful violation of the same. These images are for overall look and feel of the proposed design direction only, do not represent previous or future specifications,will not beimitated by RS, and are not to be used for the engineering or manufacturing of the product depicted hereon. Neither these images nor the design direction reflected thereon shall be used in any manner which may result in an infringement of any copyrights, trademarks,patents or other intellectual property rights. Please refer to the Table of Contents for specification issue.

制造商应当准备施工图和 / 或原型样品生产前检查和批准 LJ。
LJ 有权否决项不符合规范要求 . 所有的规格是的财产 , 以及定制的设计和打印 , 不能没有书面许可使用。同样应当退还的完成工作。
没有图纸。必须检查所有测量在现场由承包商或制造商。列出数量仅供参考 , 如有更改 , 恕。采购员应核实数量计划发行采购订单之前。供应商直接所有查询通过客户的采购代理。
本文所包含的图像不用于工程或制造产品的描述在此。制造商负责工程 , 功能和最终产品的耐用性。这些图像和设计 intentreflected 上应以任何方式使用 , 可能会导致任何的侵权行为版权、商标、专利或其他知识产权。制造商应当单独负责遵守所有适用的美国和其他涉及版权的法律 , 商标、专利和知识产权 , 并应赔偿并持有 , 所有其相关的实体 , 无害的任何索赔、损失或产生的任何费用疏忽或故意违反相同。这些图像的整体外观和感觉提出了设计方向 , 不代表之前或之后的规格 , 不会由 JL 模仿 , 不用于工程或产品的制造描述在此。这些图片和设计方向上应反映出来以任何方式使用 , 可能会导致侵犯任何版权、商标、专利或其他知识产权。请参阅表的内容规范的问题。

-ALL MEASUREMENTS TO BE VERIFIED AGAINST DRAWINGS AND CURRENT BUILDING CONDITIONS.
-MANUFACTURER TO PROVIDE SHOP DRAWINGS, DETAILS AND FINISH SAMPLES TO ASIG DESIGN FOR FINAL APPROVAL PRIOR TO PRODUCTION/INSTALLATION.
-ALL MATERIALS USED MUST MEET OR EXCEED ALL APPLICABLE FEDERAL, STATE AND LOCAL FLAME CODE REQUIREMENTS, INCLUDING CHINA
-MUST BE CONTRACT QUALITY AND SUITABLE FOR HEAVY COMMERCIAL USE.
-MUST MEET OR EXCEED ALL REQUIREMENTS OF ASIG DESIGN’S FURNITURE GENERAL NOTES.

- 所有尺寸须与图纸及现在情况核实
- 制造商须与生产或安装前向客人提供图纸有样板以作最后批核
- 所有物料须符合或超于所有适用国家或当地之防火条例标准，包括中国大 陆
- 须符合合同品质及适合重商业用途
- 须符合或超于所有客户家具综述内之标准要求

ASIG DESIGN
杰 璐 设 计 工 作 室

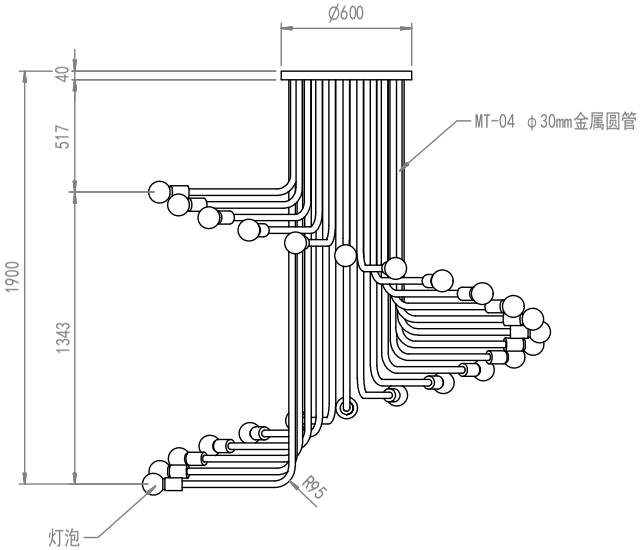

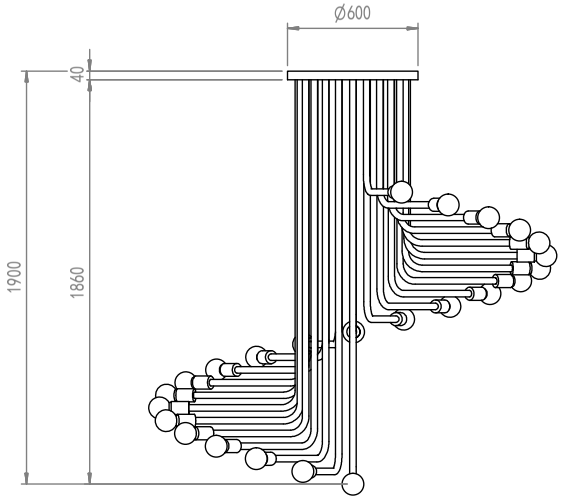

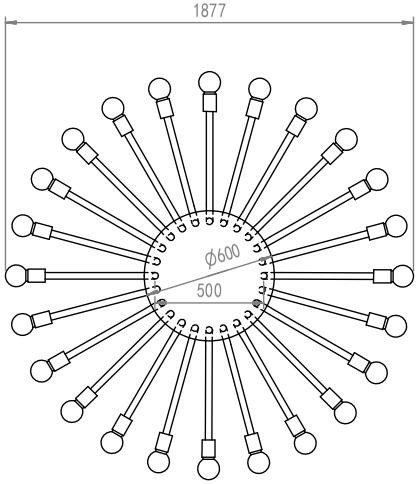

参考图片

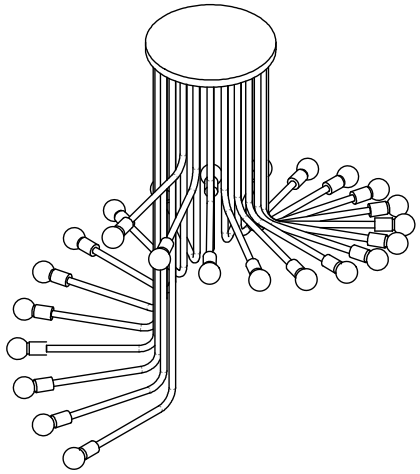

ASIG DESIGN
杰 瑞 设 计 工 作 室
上海市徐汇区枫林路485号7号楼101室
485 FENGLIN RD, BLDG 7, RM 101, SHANGHAI 200032, CHINA

这张平面图，方案和规格是ASIG DESIGN（杰瑞设计工作室）独家设计并具有专有权。任何未经ASIG DESIGN（杰瑞设计工作室）事先书面同意的复制，修改，泄露和使用这些图纸，或者以任何方式使用这些材料，以及使用其中任何部分的行为都是被严格禁止的。承建商应该严格查核所有的尺寸和数据，如果存在任何差异应该参照设计图纸执行施工，全部TBC（有待确认）的尺寸都应该经承建商仔细检查确认，所有的EX（ 首缺实际）的尺寸应该在施工过程中严格按照符合现场的实际尺寸施工。

THESE PLANS AND SPECIFICATIONS ARE THE EXCLUSIVE PROPERTY OF ASIG DESIGN. ANY REPRODUCTION, MODIFICATION, DISCLOSURE AND OR USE OF THESE MATERIALS OR ANY PORTION OF THEM WITHOUT PRIOR WRITTEN CONSENT FROM ASIG DESIGN IS STRICTLY PROHIBITED. FIGURED DIMENSIONS SHOULD BE CHECKED BY THE CONTRACTORS, AND ANY DISCREPANCIES SHOULD BE REFERRED TO THE DRAWING. ALL "TBC" DIMENSIONS ARE TO BE CONFIRMED BY THE CONTRACTOR. ALL "EX" DIMENSIONS ARE TO MATCH EXISTING.

调整日期 REV. DATE	
日期 DATE	01/21/2020
项目编号 PROJECT NO.	i190404
项目名称 PROJECT NAME	PULLMAN GUANGZHOU
书页名称 PAGE NAME	艺术吊灯 PENDANT LIGHT
书页号码 PAGE NO.	F64

NUMBER 灯具编号： F65

LIGHTING NAME 灯具名称： 艺术壁灯 PENDANT LIGHT

MANUFACTURER 供应商：
瑞瑟迪软装设计

CONTACT 联系人：
从前曼

EMAIL 电子邮件：

TELEPHONE 电话：
18302132218

MODEL 型号：
1010131

NAME 名称：

DESCRIPTION 形容：

TYPE 分类：

WEB 网址：

SPECIFICATION 描述

MATERIAL 材料
金属 METAL

COLOR 颜色：
金色 GOLD

SURFACE 表面：
拉丝 BRUSHED

SIZE 尺寸：
L250*W120*H500

BULB 灯泡：
LED

PRICE 价格：

Manufacturer shall prepare shop drawings and/or prototype samples for checking and approval by JL prior to manufacture.
JL reserves the right to reject items that do not meet the specification requirements.
All specifications are the property of RS, and along with custom designs and prints, cannot be used without written permission. The same shall be returned at the completion of the work.
Do not scale drawings. All measurements must be checked at the site by the contractor or manufacturer.
Quantities listed are for reference only and are subject to change. Purchasing agent shall verify all quantities against plans prior to issuance of Purchase Orders.Any discrepancies shall be brought to the attention of JLprior to purchasing.Vendors to direct all queries through client’s purchasing agent. The images contained herein are not to be used for the engineering or manufacturing of the product depicted hereon. Manufacturer to be responsible for the engineering,functionality and durability of the final product. Neither these images nor the design intentreflected thereon shall be used in any manner which may result in an infringement of any copyrights, trademarks, patents or other intellectual property rights. Manufacturer shall be solely responsible for compliance with all applicable U.S. and other laws regarding copyrights,、trademarks, patents and intellectual property rights, and shall indemnify and hold JL and allof its related entities, harmless from any claims, damages or expenses resulting from any negligent or willful violation of the same. These images are for overall look and feel of the proposed design direction only, do not represent previous or future specifications,will not beimitated by RS, and are not to be used for the engineering or manufacturing of the product depicted hereon. Neither these images nor the design direction reflected thereon shall be used in any manner which may result in an infringement of any copyrights, trademarks,patents or other intellectual property rights. Please refer to the Table of Contents for specification issue.

制造商应当准备施工图和 / 或原型样品生产前检查和批准 LJ。
LJ 有权否决项不符合规范要求 . 所有的规格是的财产 , 以及定制的设计和打印 , 不能没有书面许可使用。同样应当退还的完成工作。
没有图纸。必须检查所有测量在现场由承包商或制造商。列出数量仅供参考 , 如有更改 , 恕。
采购员应核实数量计划发行采购订单之前。供应商直接所有查询通过客户的采购代理。
本文所包含的图像不用于工程或制造产品的描述在此。制造商负责工程 , 功能和最终产品的耐用性。这些图像和设计 intentreflected 上应以任何方式使用 , 可能会导致任何的侵权行为版权、商标、专利或其他知识产权。制造商应当单独负责遵守所有适用的美国和其他涉及版权的法律 , 商标、专利和知识产权 , 并应赔偿并持有 , 所有其相关的实体 , 无害的任何索赔、损失或产生的任何费用疏忽或故意违反相同。这些图像的整体外观和感觉提出了设计方向 , 不代表之前或之后的规格 , 不会由 JL 模仿 , 不用于工程或产品的制造描述在此。
这些图片和设计方向上应反映出来以任何方式使用 , 可能会导致侵犯任何版权、商标、专利或其他知识产权。请参阅表的内容规范的问题。

-ALL MEASUREMENTS TO BE VERIFIED AGAINST DRAWINGS AND CURRENT BUILDING CONDITIONS.
-MANUFACTURER TO PROVIDE SHOP DRAWINGS, DETAILS AND FINISH SAMPLES TO ASIG DESIGN FOR FINAL APPROVAL PRIOR TO PRODUCTION/INSTALLATION.
-ALL MATERIALS USED MUST MEET OR EXCEED ALL APPLICABLE FEDERAL, STATE AND LOCAL FLAME CODE REQUIREMENTS, INCLUDING CHINA
-MUST BE CONTRACT QUALITY AND SUITABLE FOR HEAVY COMMERCIAL USE.
-MUST MEET OR EXCEED ALL REQUIREMENTS OF ASIG DESIGN’S FURNITURE GENERAL NOTES.

- 所有尺寸须与图纸及现在情况核实
- 制造商须与生产或安装前向客人提供图纸有样板以作最后批核
- 所有物料须符合或超于所有适用国家或当地之防火条例标准，包括中国大 陆
- 须符合合同品质及适合重商业用途
- 须符合或超于所有客户家具综述内之标准要求

ASIG DESIGN
杰 璐 设 计 工 作 室

ASIG DESIGN
杰 璐 设 计 工 作 室

NO.1178 TIANYAOQIAO
RD,4F SHANGHAI, CHINA
M: +86 15901904476
E: MAIL@ASIGDESIGN.COM
W: WWW.ASIGDESIGN.COM